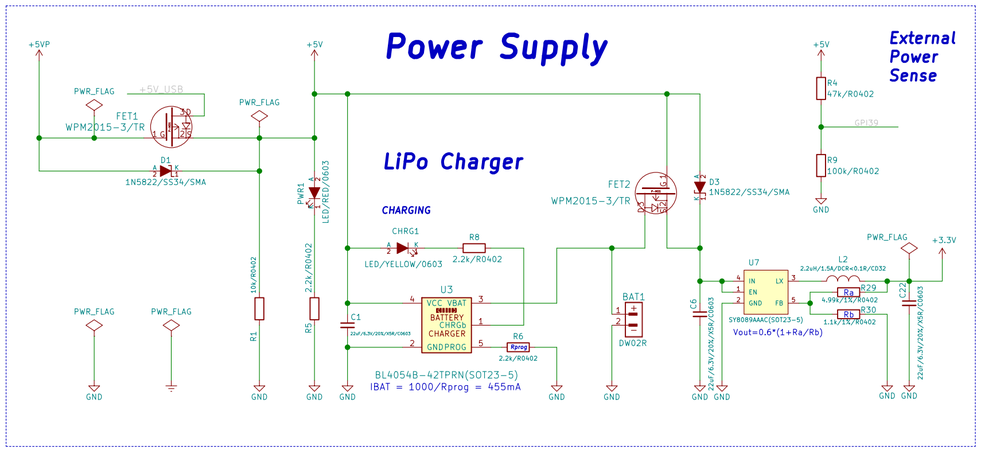

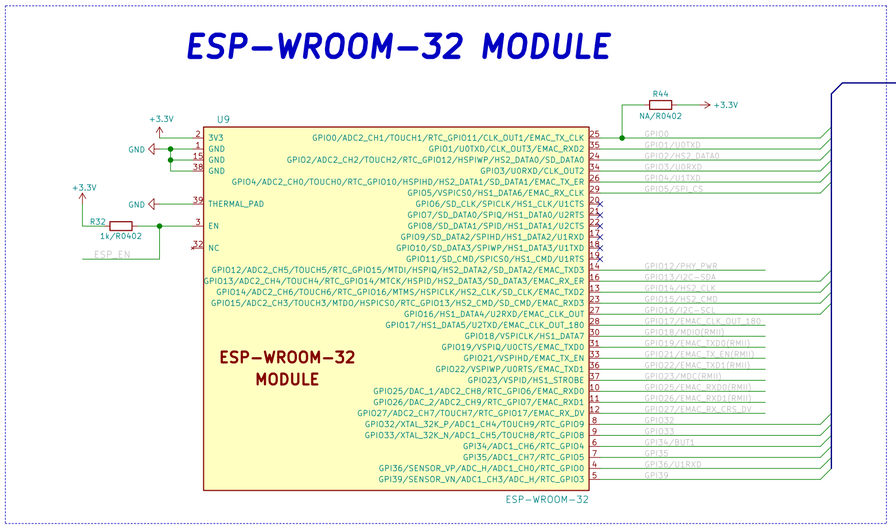

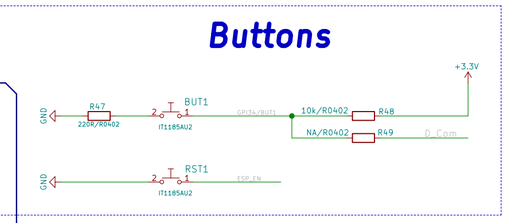

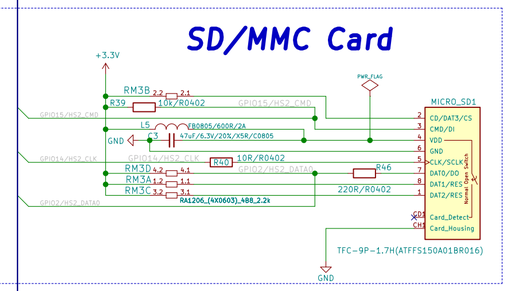

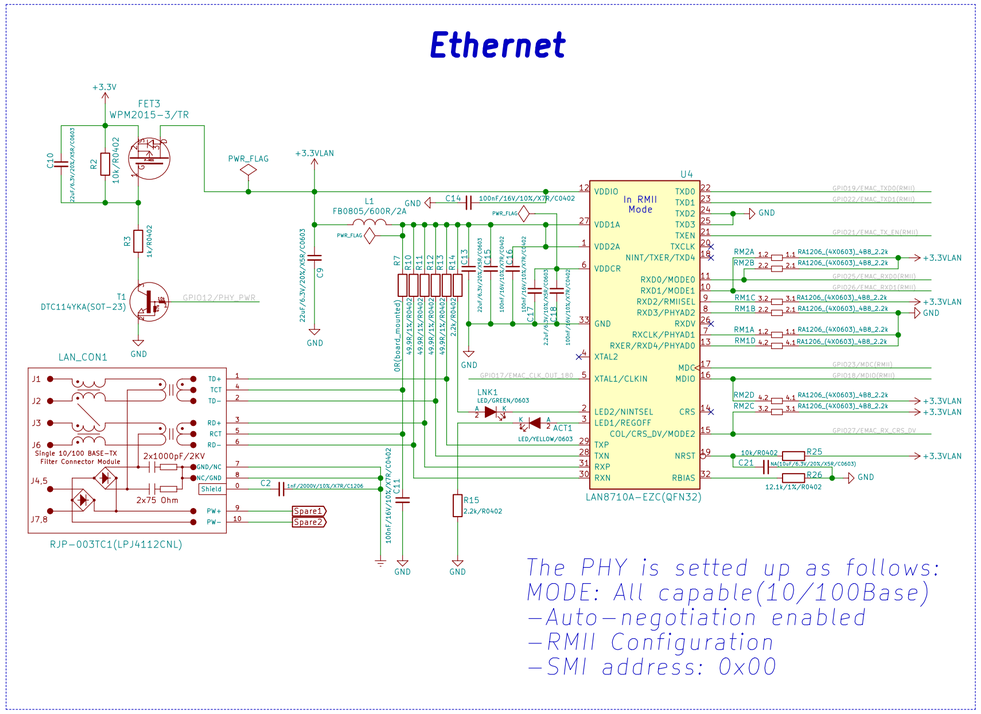

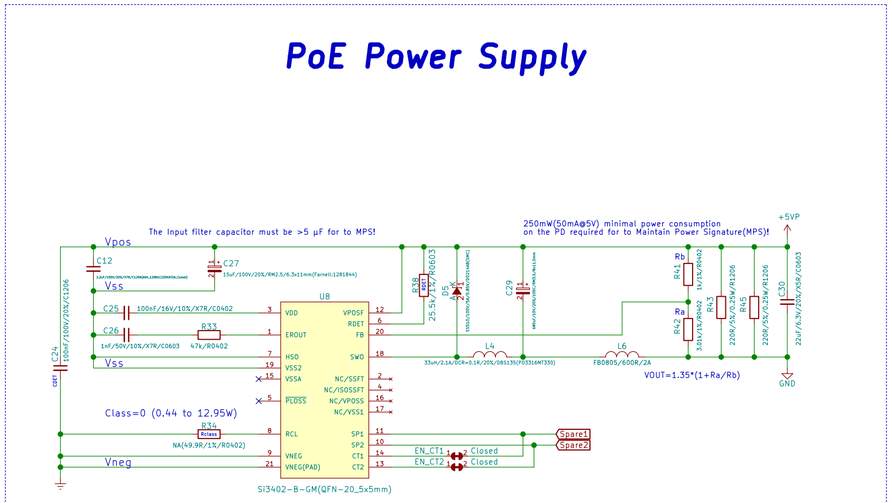

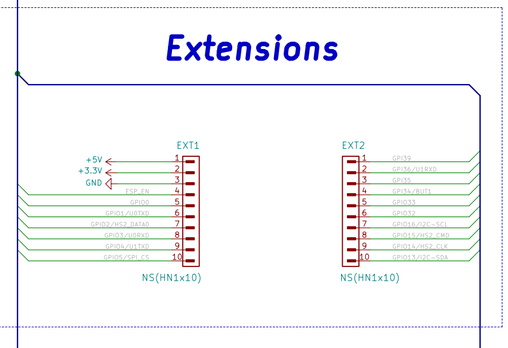

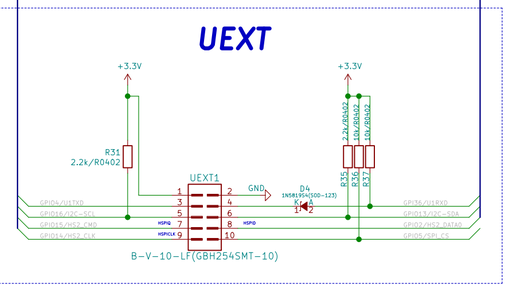

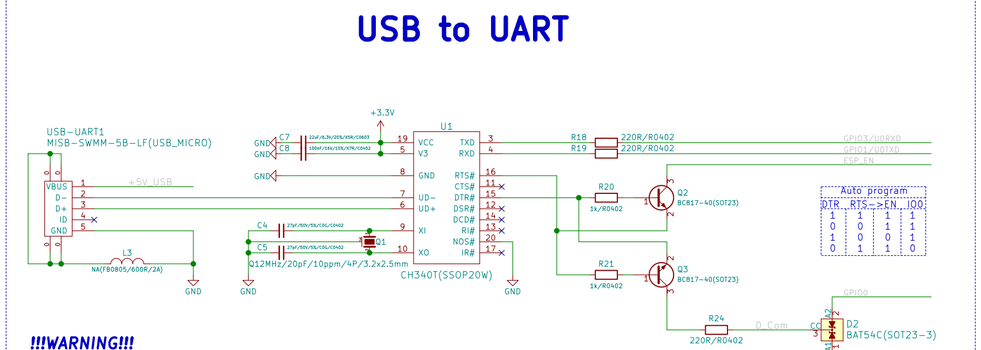

Auto program			
DTR	RTS-->EN	IO0	
1	1	1	1
0	0	1	1
0	0	0	1
0	1	1	0

!!!WARNING!!!
When the board is powered via PoE, don't include the USB cable for to programming it!!!
In case this is required, USB-ISO must be used for to guarantee galvanic isolation!
See: https://www.olimex.com/Products/USB-Modules/USB-ISO/

Notes:

Software Selectable Pins

Interface	Signal	Pin
EMAC	EMAC_MDC_out EMAC_MDI_in EMAC_MDO_out EMAC_CRS_out EMAC_COL_out	Any GPIO
I2C	I2CEXT0_SCL_in I2CEXT0_SDA_in I2CEXT1_SCL_in I2CEXT1_SDA_in I2CEXT0_SCL_out I2CEXT0_SDA_out I2CEXT1_SCL_out I2CEXT1_SDA_out	Any GPIO
General Purpose SPI	HSPIQ_in/_out HSPID_in/_out HSPICLK_in/_out HSPI_CS0_in/_out HSPI_CS1_out HSPI_CS2_out VSPIQ_in/_out VSPID_in/_out VSPICLK_in/_out VSPI_CS0_in/_out VSPI_CS1_out VSPI_CS2_out	Any GPIO

For more information refer to esp_wroom_32_datasheet_en.pdf.

Internal Bootstrapping Resistors

MTDI/GPIO12:	Pull-Down
GPIO0:	Pull-Up
GPIO2:	Pull-Down
GPIO4:	Pull-Down
MTDO/GPIO15:	Pull-Up
GPIO5:	Pull-Up

Bootstrapping Pins Settings

Voltage of Internal LDO(VDD_SDIO)			
Pin	Default	3.3V	1.8V
GPIO12/MTDI	Pull-Down	0	1

Booting Mode			
Pin	Default	SPI Flash Boot	Download Boot
GPIO0	Pull-Up	1	0
GPIO2	Pull-Down	Don't-care	0

Debugging Log on U0TXD During Booting			
Pin	Default	U0TXD Toggling	U0TXD Silent
GPIO15/MTDO	Pull-Up	1	0

Timing of SDIO Slave					
Pin	Default	Falling-edge:Output	Falling-edge:Input Rising-edge:Output	Rising-edge:Input Falling-edge:Output	Rising-edge:Input Rising-edge:Output
GPIO15/MTDO	Pull-Up	0	0	1	1
GPIO5		0	1	0	1

Fiducials

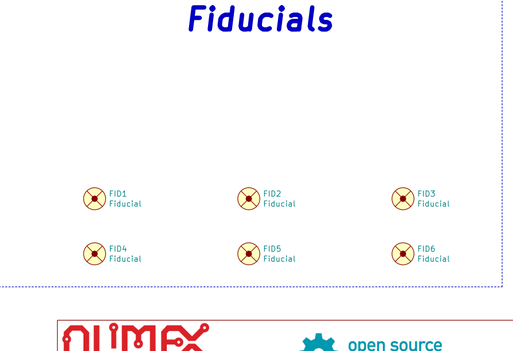

OLIMEX
https://www.olimex.com
OLIMEX LTD.
open source hardware

Sheet: /
File: ESP32-PoE_Rev_C.sch

Title: ESP32-PoE

Size: A2	Date: 2018-09-10	Rev: C
KiCad E.D.A. kicad 6.0.0-rc1-unknown-cd5b1c266ubuntu16.04.1		Id: 1/1