REV	DESCRIPTION	DESIGN	APPROVAL	DATE
A0	NEW VERSION	Yuan	Ray	2024/07/25

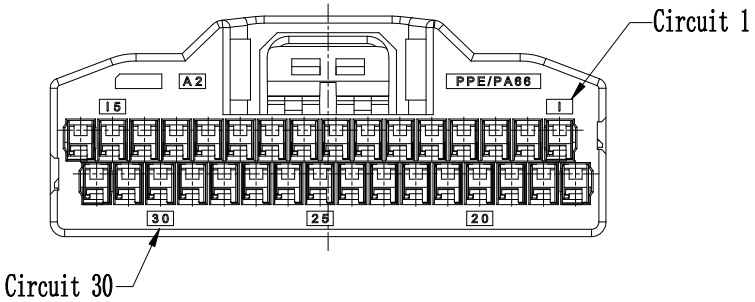

Specifications:

1. Contact Resistance/接触电阻:≤20mΩ
2. Insulation Resistance/绝缘电阻:≥100MΩ
3. Rated Voltage/额定电压:50V AC DC
4. Rated Current/额定电流:3.0A AC DC
5. Temperature Range/工作温度范围:-40℃~+125℃
6. Housing/外壳:PPE/PA66 UL94-HB Grey
7. TPA/锁扣:PPE/PA66 UL94-HB Black
8. RoHS Compliance/产品符合RoHS;

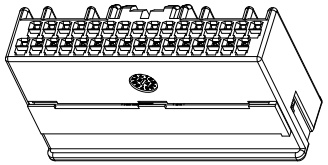

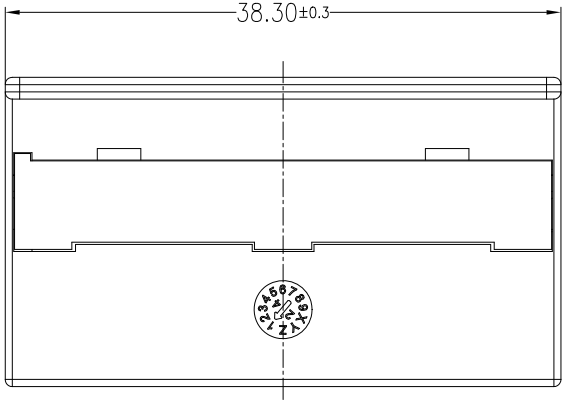

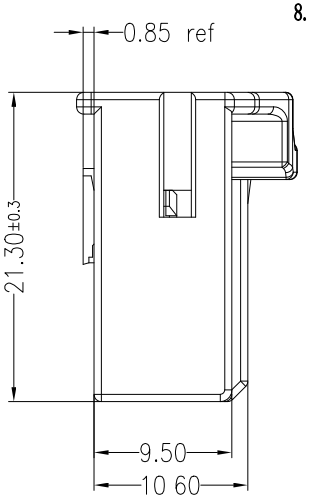

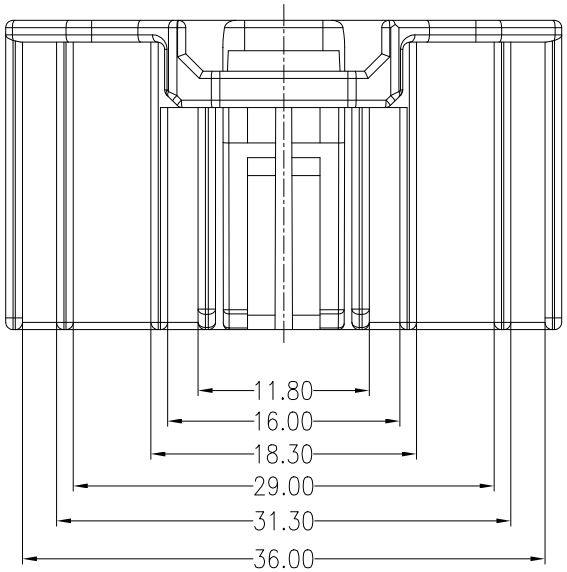

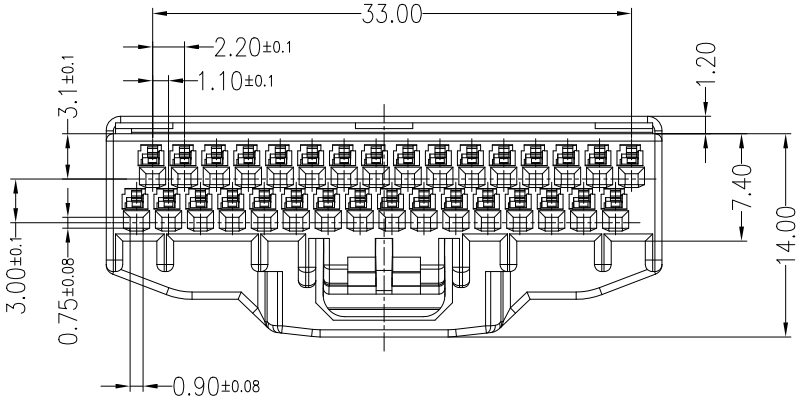

X. ± 0.50	X.° ± 1°
.X± 0.30	.X° ± 0.5°
.XX± 0.20	.XX° ± /
.XXX± 0.15	.XXX° ± /
UNITS:	mm

The information in this document is property of JiDC company and should not be copied or reproduced in any other way, without written permission.

Guangdong JiDe Precision Electronics Co., Ltd
广东济德精密电子有限公司

TITLE: 2.20mm Pitch 32PIN Female Hosing

PART NO. 9201-00033

APPD:

DWG NO: C-9201-00033

CHKD:

DRAW:

SCALE	SHEET	REV.
N/A	1/1	A0