Model CHT25

HIGH TEMPERATURE HCMOS CLOCK

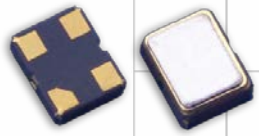

Part Dimensions:
2.5 × 2.0 × 1.0mm • 14.25851mg

Features

- Ceramic Surface Mount Package
- Extended-Industrial Temperature Ranges
- Fundamental and 3rd Overtone Crystal Designs
- Frequency Range 1.25 – 156.25MHz
- +1.8V, +2.5V and +3.3V Operation
- Output Enable Standard
- Tape and Reel Packaging, EIA-418

Standard Frequencies

* See Page 6 for common frequencies.
Check with factory for availability of frequencies not listed.

Applications

- Industrial IoT [IIoT]
- M2M Communication
- Industrial Controls
- Energy Industry
- Commercial Military & Aerospace
- Test and Measurement

Description

CTS Model CHT25 is a low cost, small size, Clock Oscillator [XO] that operates over extended-industrial temperature ranges. CHT25 has an HCMOS/TTL compatible output, offers excellent stability and low jitter/phase noise performance.

Ordering Information

Model	Output Type	Frequency Code [MHz]	Frequency Stability	Temperature Range	Supply Voltage	Packaging
CHT 25	C	XXX or XXXX	2	P	3	T

Code	Package Size
25	2.5x2.0mm

Code	Frequency
	Product Frequency Code [1]

Code	Temp. Range
P	-55°C to +105°C [1]
M	-55°C to +125°C [1]

Code	Packing
T	1k pcs./reel

Code	Output
C	HCMOS

Code	Stability
2	±100ppm
7	±150ppm

Code	Voltage
M	+1.8Vdc
N	+2.5Vdc
L	+3.3Vdc

Notes:
1] Stability codes 2 and 7. Contact factory for availability.

Not all performance combinations and frequencies may be available.
Contact your local CTS Representative or CTS Customer Service for availability.

This product is specified for use only in standard commercial applications. Supplier disclaims all express and implied warranties and liability in connection with any use of this product in any non-commercial applications or in any application that may expose the product to conditions that are outside of the tolerances provided in its specification.

©2017 CTS® Corporation. Information/product(s) subject to change. No warranty that product(s) will meet the stated specifications for customer specific applications or test equipment. Visit www.ctscorp.com for list of applicable patent(s), more information, or to request a quote.

Electrical Specifications

Operating Conditions

PARAMETER	SYMBOL	CONDITIONS	MIN	TYP	MAX	UNIT
Maximum Supply Voltage	V_{CC}	-	-0.5	-	4.0	V
Supply Voltage	V_{CC}	±5%	1.710	1.8	1.890	V
			2.375	2.5	2.665	
			3.135	3.3	3.465	
Supply Current	I_{CC}	Typical @ Nominal Vcc, C_L = 15 pF, T_A = +25°C				mA
		@ +1.8V	-	10	15	
		@ +2.5V	-	15	20	
		@ +3.3V	-	15	20	
Output Load	C_L	-	-	-	15	pF
Operating Temperature	T_A	-	-55	+25	+105	°C
			-55		+125	
Storage Temperature	T_{STG}	-	-55	-	+125	°C

Frequency Stability

PARAMETER	SYMBOL	CONDITIONS	MIN	TYP	MAX	UNIT
Frequency Range	f_O	Temperature Range -55°C to +105°C		1.25 - 156.25		MHz
		Temperature Range -55°C to +125°C		40 - 156.26		
Frequency Stability [Note 1]	$\Delta f/f_O$	-		25, 30, 50, 100 or 150		±ppm
Aging	$\Delta f/f_{25}$	First Year @ +25°C, nominal V_{CC}	-5	-	5	ppm

1.] Inclusive of initial tolerance at time of shipment, changes in supply voltage, load, temperature and 1st year aging.

Output Parameters

PARAMETER	SYMBOL	CONDITIONS	MIN	TYP	MAX	UNIT
Output Type	-	-		HCMOS		-
Output Voltage Levels	V_{OH}	Logic '1' Level, CMOS Load	$0.9V_{CC}$	-	-	V
	V_{OL}	Logic '0' Level, CMOS Load	-	-	$0.1V_{CC}$	
Output Current Levels	I_{OH}	V_{OH} = 90%V_{CC} [1.8V, 2.5V, 3.3V]	-	-	-4, -4, -8	mA
	I_{OL}	V_{OL} = 10%V_{CC} [1.8V, 2.5V, 3.3V]	-	-	+4, +4, +8	
Output Duty Cycle	SYM	@ 50% Level	45	-	55	%
Rise and Fall Time [Note 2]	T_R, T_F	@ 10%/90% Levels, Nominal V_{CC}, C_L = 15pF				ns
		@ +1.8V	-	5	7	
		@ +2.5V	-	5	7	
		@ +3.3V	-	6	7	
Start Up Time	T_S	Application of V_{CC}	-	2	5	ms

2.] Parameters are worst case and account for comprehensive range of product specification. Performance may vary by application and must be validated by end user.

©2017 CTS® Corporation. Information/product(s) subject to change. No warranty that product(s) will meet the stated specifications for customer specific applications or test equipment. Visit www.ctscorp.com for list of applicable patent(s), more information, or to request a quote.

Electrical Specifications

Output Parameters

PARAMETER	SYMBOL	CONDITIONS	MIN	TYP	MAX	UNIT
Enable Function		Standby				
Enable Input Voltage	V_{IH}	Pin 1 Logic '1', Output Enabled	0.7V_{CC}	-	-	V
Disable Input Voltage	V_{IL}	Pin 1 Logic '0', Output Standby	-	-	0.3V_{CC}	V
Enable Current	I_{STB}	Pin 1 Logic '0', Output Standby	-	-	10	µA
Enable Time	T_{PLZ}	Pin 1 Logic '1'	-	-	5	ms
Phase Jitter, RMS	tjrms	Bandwidth 12 kHz - 20 MHz	-	0.5	<1	ps

Enable Truth Table

Pin 1	Pin 3
Logic '1'	Output
Open	Output
Logic '0'	High Imp.

Test Circuit

HCMOS

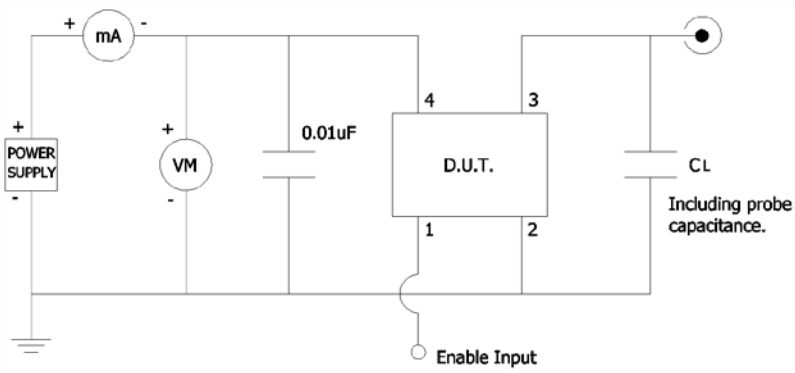

Output Waveform

HCMOS

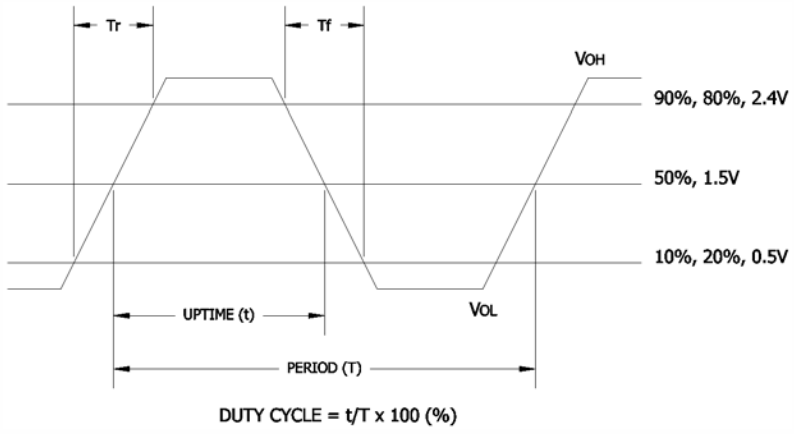

©2017 CTS® Corporation. Information/product(s) subject to change. No warranty that product(s) will meet the stated specifications for customer specific applications or test equipment. Visit www.ctscorp.com for list of applicable patent(s), more information, or to request a quote.

Mechanical Specifications

Package Drawing

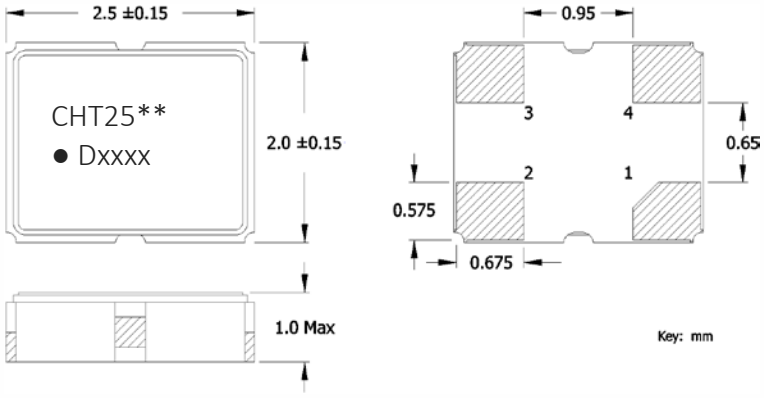

Marking Information

1. CHT25 – CTS model.
2. ** – Manufacturing Site Code.
3. ● – Pin 1 identifier.
4. D – Date Code. See Table I for codes.
5. xxxx – Frequency Code.
   3-digits for frequencies <100MHz
   4-digits for frequencies 100MHz or greater

[See document 016-1454-0, Frequency Code Tables.]

Recommended Pad Layout

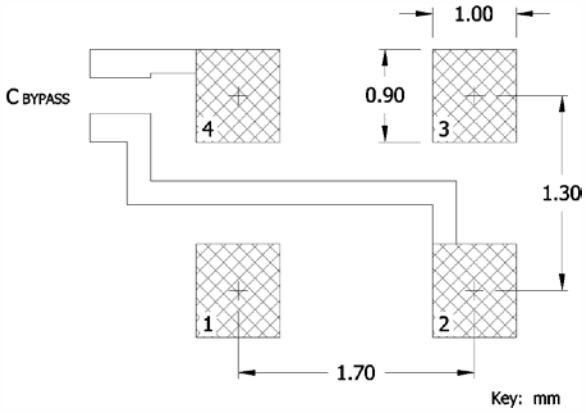

Notes

1. Termination pads (e4). Barrier-plating is nickel [Ni] with gold [Au] flash plate.
2. Reflow conditions per JEDEC J-STD-020; +260°C maximum, 20 seconds.
3. MSL = 1.

Pin Assignments

Pin	Symbol	Function
1	EOH	Enable
2	GND	Circuit & Package
3	Output	RF Output
4	V_{CC}	Supply Voltage

Table I - Date Code

YEAR \ MONTH	JAN	FEB	MAR	APR	MAY	JUN	JUL	AUG	SEP	OCT	NOV	DEC
2001 2005 2009 2013 2017	A	B	C	D	E	F	G	H	J	K	L	M
2002 2006 2010 2014 2018	N	P	Q	R	S	T	U	V	W	X	Y	Z
2003 2007 2011 2015 2019	a	b	c	d	e	f	g	h	j	k	l	m
2004 2008 2012 2016 2020	n	p	q	r	s	t	u	v	w	x	y	z

©2017 CTS® Corporation. Information/product(s) subject to change. No warranty that product(s) will meet the stated specifications for customer specific applications or test equipment. Visit www.ctscorp.com for list of applicable patent(s), more information, or to request a quote.

Packaging - Tape and Reel

Tape Drawing

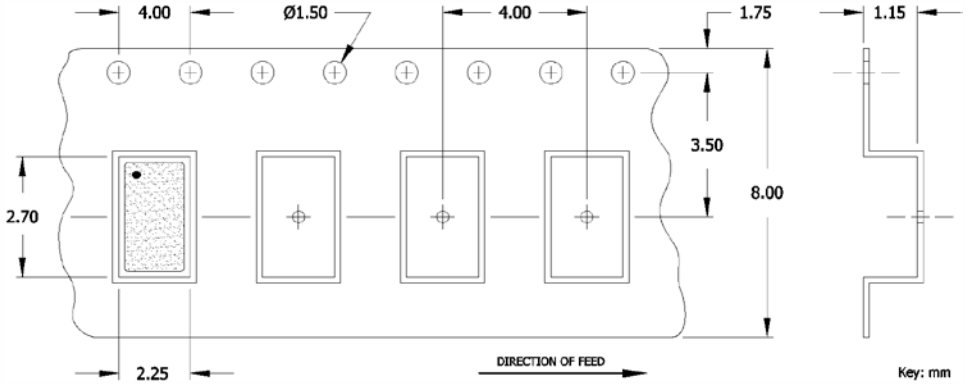

Reel Drawing

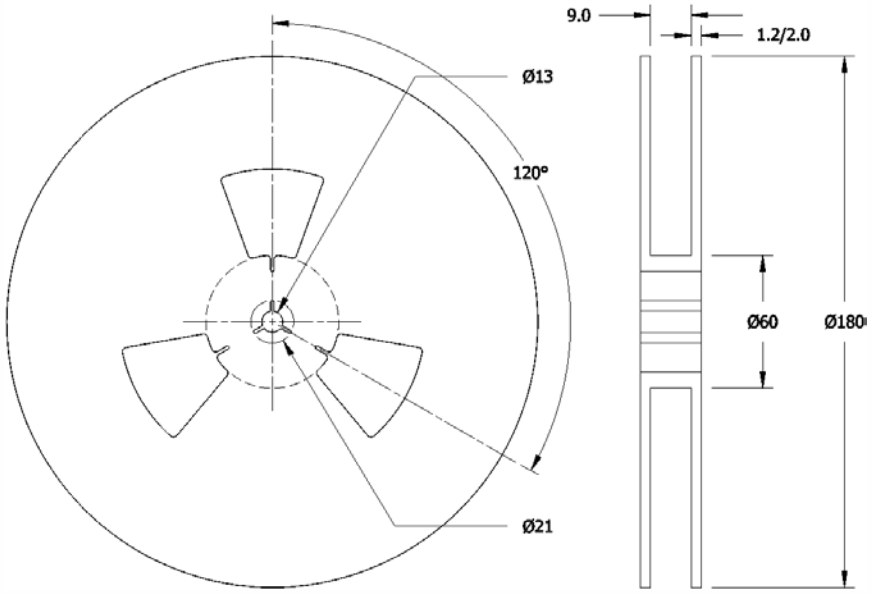

Notes

1. Device quantity is 1k pieces minimum and 3k pieces maximum per 180mm reel.
2. Complete CTS part number, frequency value and date code information must appear on reel and carton labels.

©2017 CTS® Corporation. Information/product(s) subject to change. No warranty that product(s) will meet the stated specifications for customer specific applications or test equipment. Visit www.ctscorp.com for list of applicable patent(s), more information, or to request a quote.

Addendum

Common Frequencies Available – MHz

FREQUENCY	FREQUENCY CODE	FREQUENCY	FREQUENCY CODE	FREQUENCY	FREQUENCY CODE	FREQUENCY	FREQUENCY CODE
4.000000	040	24.000000	240	40.000000	400		
8.000000	080	24.576000	24C	48.000000	480		
10.000000	100	25.000000	250	50.000000	500		
12.000000	120	26.000000	260				
12.288000	122	27.000000	270				
14.318180	143	30.000000	300				
14.745600	147	32.000000	320				
16.000000	160	33.333000	33E				
20.000000	200	37.400000	374				
22.118400	221	38.400000	384				

©2017 CTS® Corporation. Information/product(s) subject to change. No warranty that product(s) will meet the stated specifications for customer specific applications or test equipment. Visit www.ctscorp.com for list of applicable patent(s), more information, or to request a quote.