THIS DRAWING IS UNPUBLISHED. RELEASED FOR PUBLICATION -,- .
© COPYRIGHT - By - ALL RIGHTS RESERVED.

REVISIONS

P	LTR	DESCRIPTION	DATE	DWN	APVD
	AD1	REVISED ECR-18-011675	23JUL2018	BH	RP
	AD2	REVISED PER ECR-20-009164	14JUL2020	MK	DH

1 CONTINUOUS STRIP ON REELS.

2 FOREIGN PRODUCTION ONLY

3 SILVER PL 0.00381 [.000150] MIN

5 NICKEL PL 0.00381 [.000150] MIN

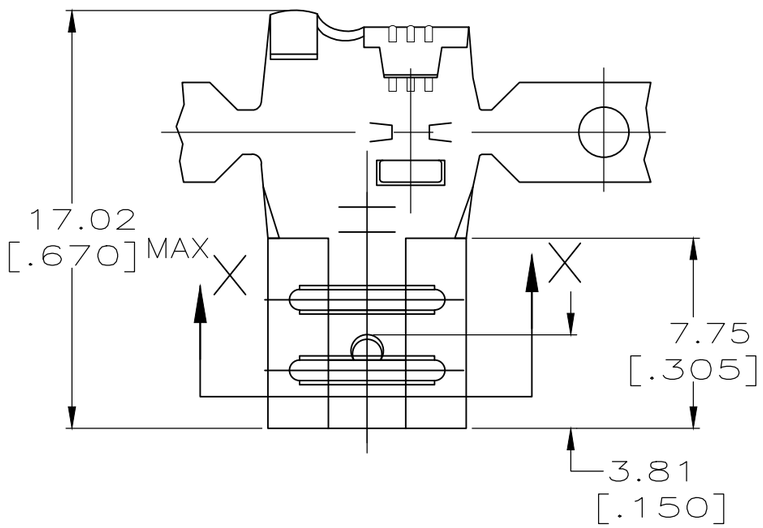

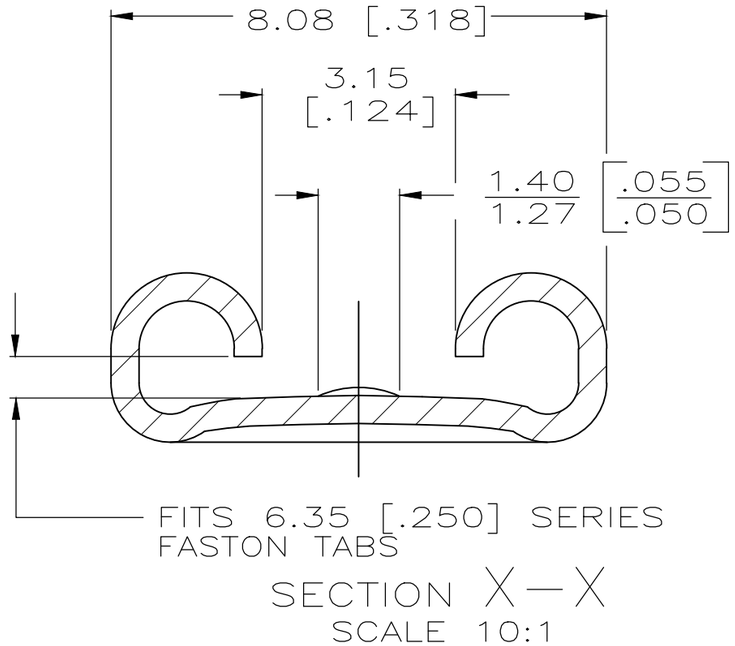

SECTION X-X
SCALE 10:1

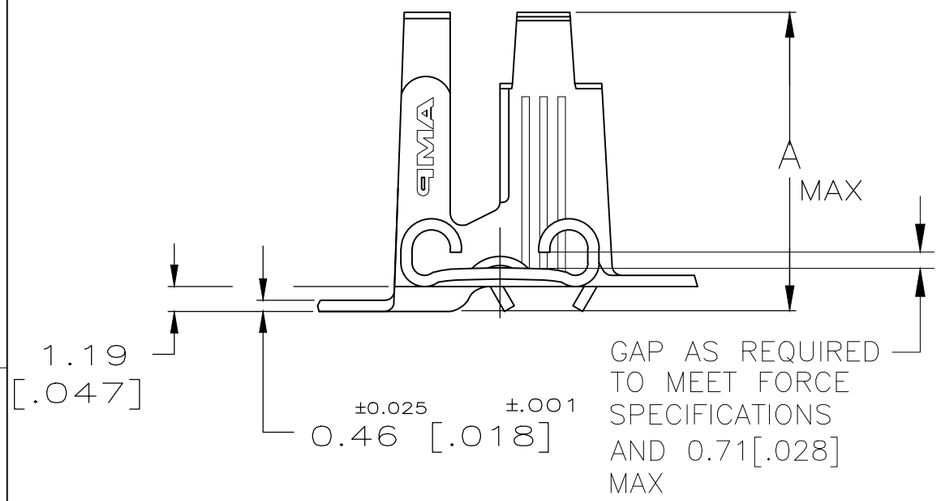

DIM A	INSULATION RANGE	WIRE RANGE	MATING TAB THK	FINISH	MATERIAL	PART NO
12.19 [.480]	2.79-5.33 [.110-.210] DIA	3.0-5.0mm 2 [12-10] AWG 6000-10600 CMA	0.84-0.76 [.033-.030]	NICKEL 5	T2 STEEL	42563-9
				TIN	T3 PHOS BRZ	42563-8
				SILVER 3	T3 PHOS BRZ	42563-6
11.18 [.440]		3.0-5.0mm^2 [12-10] AWG 9600 MAX CMA		SILVER 3	T3 PHOS BRZ	~~42563-7~~
				TIN	T3 PHOS BRZ	~~42563-5~~
				-	T3 PHOS BRZ	~~42563-4~~
				SILVER 3	#4H BRASS	~~42563-3~~
				TIN	#4H BRASS	42563-2
				-	#4H BRASS	~~42563-1~~

THIS DRAWING IS A CONTROLLED DOCUMENT.

DIMENSIONS: INCHES

TOLERANCES UNLESS OTHERWISE SPECIFIED:

0 PLC	± -
1 PLC	± -
2 PLC	± 0.38 [.015]
3 PLC	± -
4 PLC	± -
ANGLES	± -

MATERIAL: SEE TABLE

FINISH: SEE TABLE

DWN JR RUTH 2/14/91
CHK P FORTNEY 2/14/91
APVD C MEYERS 2/14/91
PRODUCT SPEC D REINER 2/14/91
APPLICATION SPEC -
WEIGHT -

TE Connectivity Ltd.

NAME: RECEPTACLE, FASTON, FLAG, 6.35 [.250] SERIES

SIZE	CAGE CODE	DRAWING NO	RESTRICTED TO
A3	00779	C-42563	-

CUSTOMER DRAWING

SCALE 4:1 SHEET 1 OF 1 REV AD2