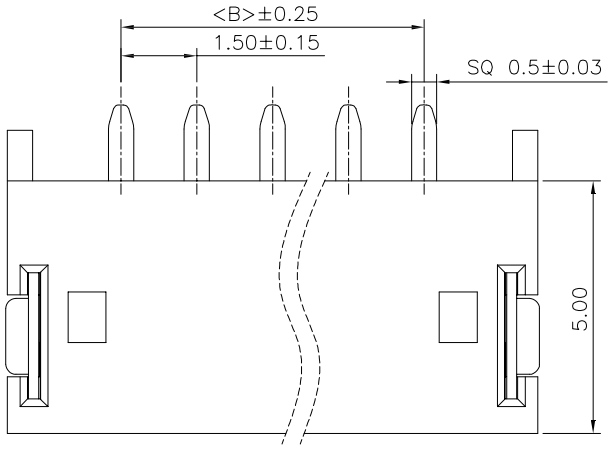

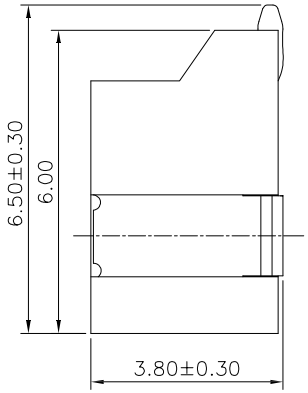

Specifications:
Current rating:1A AC/DC.
Voltage rating:100V AC/DC
Temperature range:−40°C~+105°C.
Contact resistance:20MΩ Max.
Insulation resistance:500MΩ Min.
Withstanding voltage: 500V AC/minute.
Material:PA9T/LCP.UL94V−0.

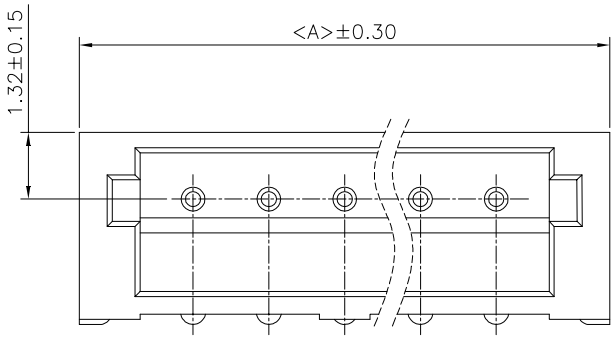

Recommended P.C.B Layout(Top Side)
P.C.B Thickness = 1.20mm (Tolerance=±0.05)

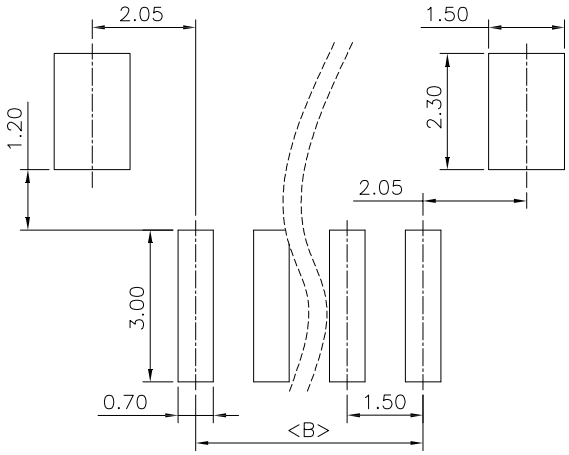

PART NO.	Dimensions	
	A	B
A1501WR−S−02P	6.00	1.50
A1501WR−S−03P	7.50	3.00
A1501WR−S−04P	9.00	4.50
A1501WR−S−05P	10.50	6.00
A1501WR−S−06P	12.00	7.50
A1501WR−S−07P	13.50	9.00
A1501WR−S−08P	15.00	10.50
A1501WR−S−09P	16.50	12.00
A1501WR−S−10P	18.00	13.50
A1501WR−S−11P	19.50	15.00
A1501WR−S−12P	21.00	16.50
A1501WR−S−13P	22.50	18.00

REV	DATE	SYMBOL	MODIFICATION DESCRIPTION

OPERATION	
X.X	±0.25
X.XX	±0.15
X.XXX	±0.10
Angle	±3°
DIM	TOL

SCALE		Fit	
UNIT		MM	
SIZE	A4	DESIGN	赵文品2024.10.10
SHEET	1/1	CHECK	
PROJ.		APPROVE	

Yxcon 东莞市宇熙精密连接器有限公司
www.yxcon.com Dongguan Yuxi Electronic Co.,Ltd.

PART NO.	A1501WR-S-NP
TITLE:	
Customer No.	

由 Autodesk 教育版产品制作