MARKETING SALES DRAWING

DIMENSIONS IN INCHES - DO NOT SCALE THIS DRAWING
DIMENSIONS IN METRIC [ ]

This drawing is the property of Tusonix, Inc., and may not be used, reproduced, published or disclosed to others without expressed authorization by Tusonix Inc.

ORIENTATION

Electrical Testing per Tusonix standard test plans and Mil-Std-202 Test Methods.

CIRCUIT

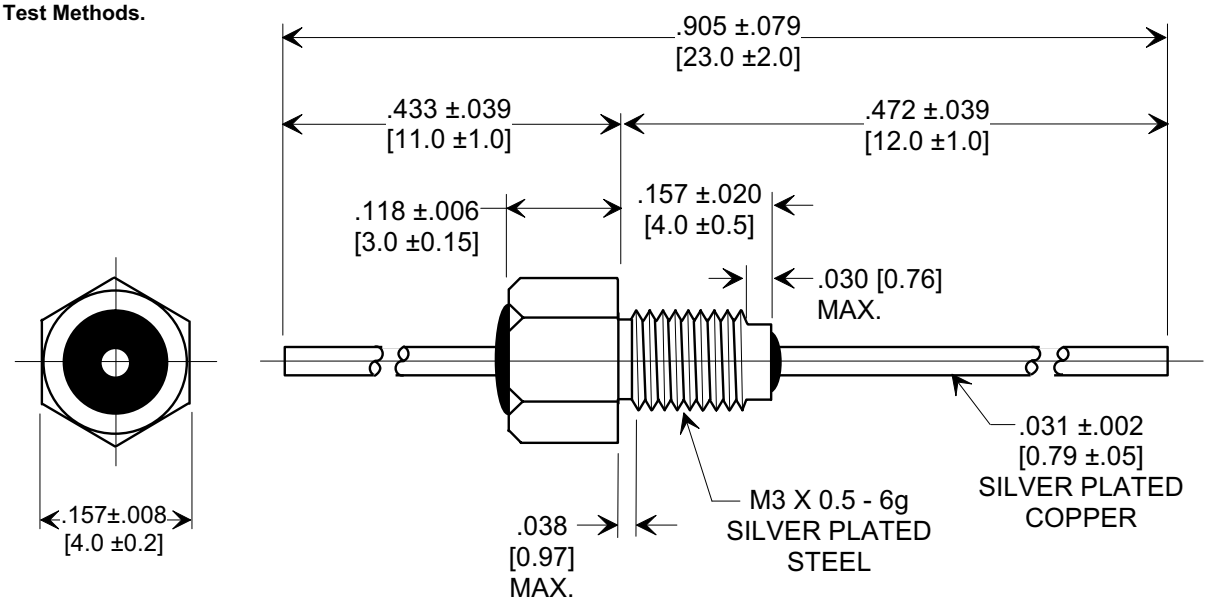

MOUNTING HARDWARE

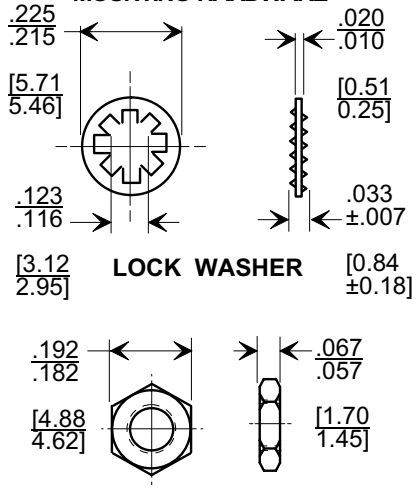

NOTES:
1. OPERATING TEMP. RANGE: -55°C TO +125°C.
2. SUPPLIED WITH SILVER PLATED HEX NUT AND LOCK WASHER.
3. MAX. RECOMMENDED MOUNTING TORQUE : 0.23 Nm.
4. MAX. RECOMMENDED SOLDERING TEMPERATURE : 260° C. SEE INSTALLATION RECOMMENDATIONS.
5. TUSONIX TRADEMARK AND PART VARIATION NUMBER STAMPED ON HEX FLATS. STANDARD PART: BLACK INK. RoHS PART: GREEN INK.
6. TUSONIX STANDARD PART NUMBER: 4400-076. TUSONIX RoHS COMPLIANT PART NUMBER: 4400-076 LF. CUSTOMER MUST SPECIFY STANDARD OR RoHS PART NUMBER WHEN ORDERING.

CAP.(pf)	TOLERANCE	DC WORKING VOLTAGE		DC CURRENT (AMPS)	DWV (VDC)	MIN. NO LOAD INSERTION LOSS (db) @ 25°C PER MIL-STD-220				
		85°C	125 °C			1 MHz	10 MHz	100 MHz	1 GHz	10 GHz
100	GMV	300	200	10	500	----	----	3	20	28

REVISION RECORD

0	Original Release C.O. **19990426-3-02**	
1	**20000104-1-05**	ADDED HEX NUT (2) PLCS. S.M. 01-07-00
2	**20061031-3-02**	ADDED NOTE 6 & REVISED NOTE 5. S.M. 11-02-06

X-2015 Rev-0

--TOLERANCES--
Unless Otherwise Specified

DECIMAL ± NOTED

ANGLES ±

TUSONIX
TUCSON, ARIZONA

Title
BUSHING STYLE EMI FILTER

Drawn **S.M. 04-30-99**
Scale **5 X**
Approved **J.Mc. 04-30-99**

A **4400-076**