Subminiature Snap Switch

Single Pole

DB Series

Features

- Precision switch with high repeat accuracy
- Models available for operating temperature up to 120 °C
- Various contact materials available
- RoHS compliant
- Various aux actuators (can be retrofitted)
- Two mounting positions
- Mechanical life up to 15,000,000 operations

Standard Parts[1]

DB1C-A1AA	DB1C-A1RC	DB1C-B1RC	DB2C-A1MC	DB2C-C1AA	DB3C-B1AA
DB1C-A1LB	DB1C-B1AA	DB1C-C1AA	DB2C-A1RC	DB3C-A1AA	DB3C-B1LB
DB1C-A1LC	DB1C-B1LB	DB2C-A1AA	DB2C-B1AA	DB3C-A1LB	DB3C-B1LC
DB1C-A1MC	DB1C-B1LC	DB2C-A1LB	DB2C-B1LC	DB3C-A1LC	DB3C-B1MC
DB1C-A1RB	DB1C-B1MC	DB2C-A1LC	DB2C-B1RC	DB3C-A1RC	DB3C-B1RC
					DB3C-C1AA

[1]The part number configuration matrix below provides details to the part numbers above.
For configurable part numbers that are not listed above, not listed in your region, or for custom part numbers, contact the factory or your distributor.

Part Number Breakdown

DB1B-B1AA

Series

DB

Contact Rating[2]

120 °C or 85 °C	
1	5 Amp
2	10.1 Amp
3	0.1 Amp
85 °C only	
5	1 Amp
6	5 Amp
7	10.1 Amp

Configuration

120 °C	
A	SPST NO
B	SPST NC
C	SPDT
85 °C	
E	SPST NO
F	SPDT NC
G	SPDT

Terminal Type millimeters (inches)

A1	Solder, short
B1	2.8 x 0.5 (0.110 x 0.020) QC, straight
C1	1.3 x 0.5 (0.051 x 0.020) PCB, straight
D1	0.6 x 0.5 (0.024 x 0.020) PCB, straight
D2	0.6 x 0.5 (0.024 x 0.020) PCB, RH side w/location pins
D3	0.6 x 0.5 (0.024 x 0.020) PCB, LH side w/location pins
D4	0.6 x 0.5 (0.024 x 0.020) PCB, RH side
D5	0.6 x 0.5 (0.024 x 0.020) PCB, LH side

Actuator Type

AA	Spherical-head, no auxiliary actuator
BA	Radius, no auxiliary actuator
For others, see actuator table at http://switches-sensors.zf.com/us/	

[2]UL current rating; see table below for complete details

Electrical Specifications – Contact Ratings

Contact	EN61058	UL1054
1	6 A, 250 VAC; 0.1 A, 80 VDC	5 A, 125/250 VAC; 1 A, 48 VDC
2	10 (1.5) A, 250 VAC; 0.1 A, 80 VDC	10.1 A, 125/250 VAC; ¼ HP, 125 VAC
3	0.1 A, 250 VAC; 0.1 A, 80 VDC	0.1 A, 125/250 VAC; 0.1 A, 30 VDC
4	4 A, 250 VAC	4 A, 125/250 VAC; 1 A, 48 VDC
5	1 A, 250 VAC	1 A, 125/250 VAC; 1 A, 48 VDC
6	6 A, 250 VAC	5 A, 125/250 VAC
7	10 (1.5) A, 250 VAC	10.1 A, 125/250 VAC, ¼ HP, 125 VAC

UL file number E314201

Mechanical Specifications

Contact Gap	< 3 mm (µ)
Operating Force	70 – 280 cN (model dependent, without actuator)
Total Travel (without actuator)	1.6 mm

Operating life

	Operation Cycles		
Contact	EN61058	UL1054	Mechanical Life
1	10,000	6,000	15,000,000
2	10,000	6,000	10,000,000
3	50,000	100,000	15,000,000
4	50,000	6,000	15,000,000
5	50,000	6,000	15,000,000
6	50,000	6,000	15,000,000
7	50,000	6,000	10,000,000

Material Specifications

Base	PET (UL 94 V-0)
Cover	PBT (UL 94 V-0); PET (UL 94 V-0)
Actuator	PBT (UL 94 V-0) 120 ^{O}C, POM (UL 94 HB) 85 ^{O}C
Contacts	$AgSnO_2$, AgNi, AuAgPt (Crosspoint)
Terminals	CuZn (silver-plated)
Auxiliary Actuator	Stainless Steel or plastic
Switching parameters	Complete chart available at http://switches-sensors.zf.com/us/

Environmental Specifications

Ambient Temperature	-40 ^{O}C to 85 ^{O}C/120 ^{O}C (-40 ^{O}F to 185 ^{O}F/248 ^{O}F)
Ingress Protection	IP50
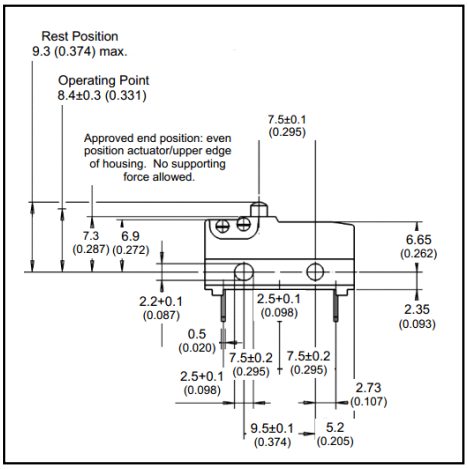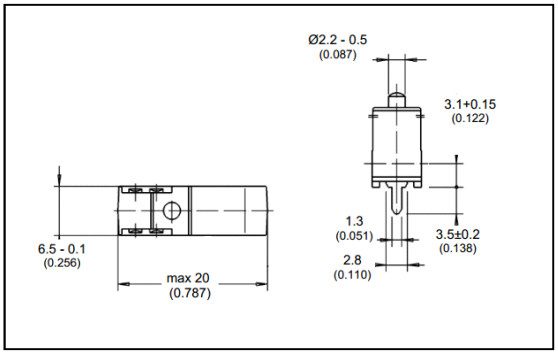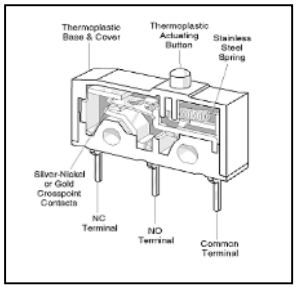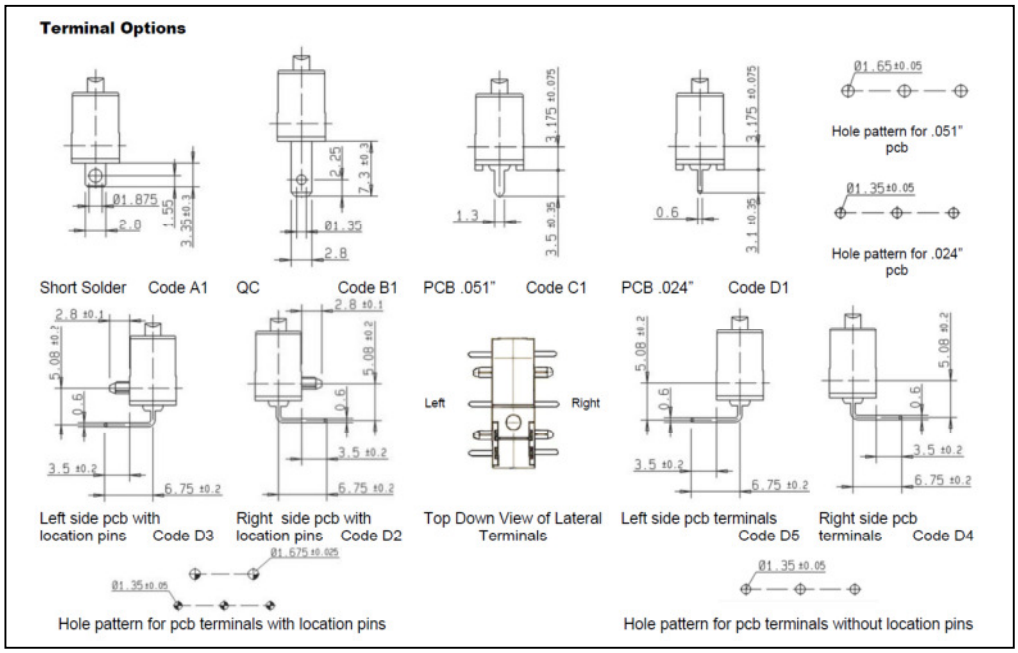
Dimensions mm (inches)