# MARKETING SALES DRAWING

DIMENSIONS IN INCHES - DO NOT SCALE THIS DRAWING
DIMENSIONS IN METRIC - [ ]

**Electrical Testing per Tusonix standard test plans and Mil-Std-202 Test Methods.**

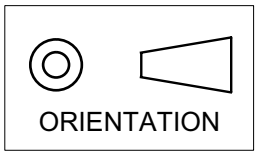


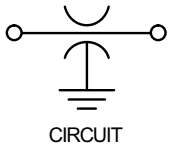


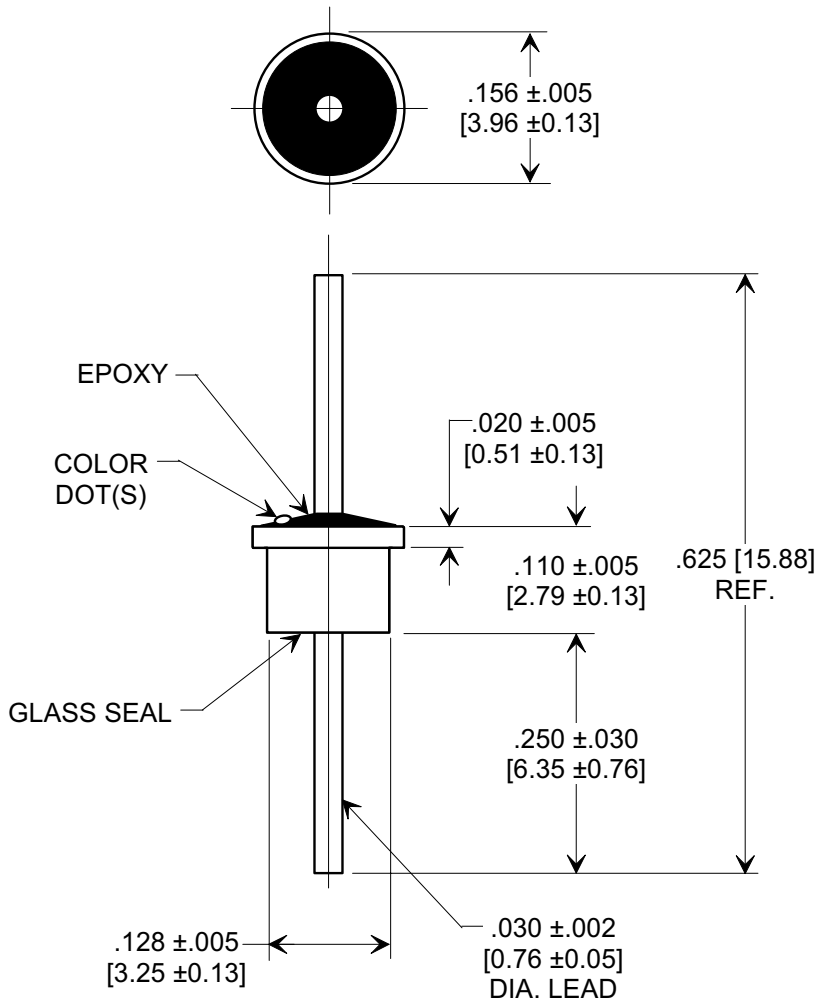


NOTES:
1. Operating temperature range: -55°C to +125°C.
2. Gold plated case and lead.
3. Epoxy sealed on opposite end from glass seal.
4. Max. recommended soldering temperature: 260°C.
   See installation recommendations.
5. Recommended mounting hole: .135 [3.43] dia.
6. Solder preform available for mounting.
7. Tusonix Standard part number: 4300-013.
   Tusonix RoHS compliant part number: 4300-013 LF.
   Customer must specify Standard or RoHS part number when ordering.
8. RoHS compliant part marked with additional dark green dot for identification.

| Cx (pF) | TOL. | DC WORKING VOLTAGE | | DC CURRENT (AMPS) | I.R. MIN | D.W.V. | MIN. NO LOAD INSERTION LOSS (dB) @ 25° C PER MIL-STD-220 | | | | | COLOR CODE |
|---|---|---|---|---|---|---|---|---|---|---|---|---|
| | | 85°C | 125°C | | | | 1 MHz | 10 MHz | 100 MHz | 1GHz | 10 GHz | |
| 27,000 | GMV | 70 | 50 | 5 | 10 G | 150 VDC | 10 | 28 | 42 | 65 | 65 | RED--RED |

| REVISION RECORD | | |
|---|---|---|
| 0 | Original Release C.O. 20020514-5-02 | |
| 1 | ADDED NOTES 7 & 8. S.M. 05-23-05 | 20050511-2-18 |

--TOLERANCES--
Unless Otherwise Specified

DECIMAL ±

ANGLES ±

TUSONIX
TUCSON, ARIZONA

Title
**SOLDER MOUNT EMI FILTER**

Drawn L.E. 05-14-02 | Scale 5 X

Approved B.Mc. 05-14-02

A | **4300-013**

X-2015 Rev-0