MARKETING SALES DRAWING

This drawing is the property of Tusonix, Inc., and may not be used, reproduced, published or disclosed to others without expressed authorization by Tusonix Inc.

DIMENSIONS IN INCHES - DO NOT SCALE THIS DRAWING
DIMENSIONS IN METRIC - [ ]

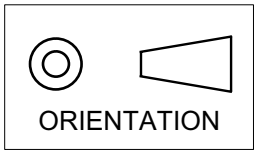

Electrical Testing per Tusonix standard test plans and Mil-Std-202 Test Methods.

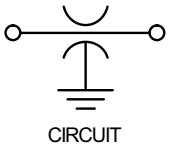

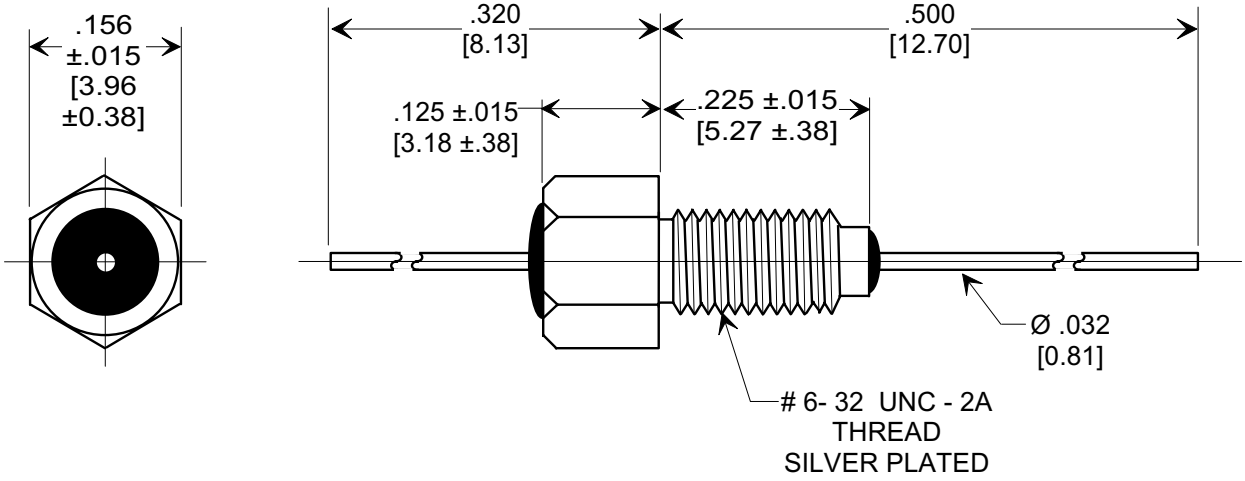

MOUNTING HARDWARE

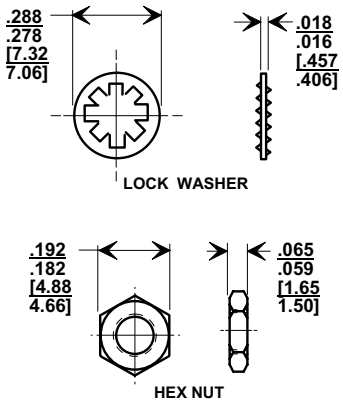

NOTES:
1. TUSONIX STANDARD PART NUMBER: 4402-018.
   TUSONIX RoHS COMPLIANT PART NUMBER: 4402-018 LF.
   CUSTOMER MUST SPECIFY STANDARD OR RoHS PART NUMBER WHEN ORDERING.
2. BUSHING: SILVER PLATED.
3. LEAD FINISH: STANDARD PART #: SOLDER PLATED. RoHS PART #: SILVER PLATED.
4. PART MARKING: TRADEMARK AND VARIATION NUMBER ON HEX FLATS. STANDARD PART: BLACK INK. RoHS PART: GREEN INK.
5. OPERATING TEMPERATURE RANGE: -55°C TO +125°C.
6. MAX. RECOMMENDED MOUNTING TORQUE: 2.0 lb.-in. [0.23 Nm].
7. MAX. RECOMMENDED SOLDERING TEMPERATURE: 260°C. SEE INSTALLATION RECOMMENDATIONS.
8. SILVER PLATED NUT AND LOCK WASHER INCLUDED.

MIN. CAP.(pf)	DC WORKING VOLTAGE	DC CURRENT (AMPS)	I.R. MIN. @ 100 (VDC)	DWV (VDC)	MINIMUM NO LOAD INSERTION LOSS (dB) AT 25°C PER MIL-STD-220						
	125 °C				1 MHz	3 MHz	10 MHz	30 MHz	100 MHz	300 MHz	1GHz
100,000	50	10A	10 G Ω	200	22	31	40	44	47	55	65

REVISION RECORD

0	Original Release C.O. **941006-1**	ADDED & REVISED NOTES. ADDED IR & DWV.S.M. 03-23-06	1
		20060310-3-10	

X-2015 Rev-0

--TOLERANCES-- Unless Otherwise Specified
DECIMAL ± .031 [0.79]
ANGLES ±

TUSONIX
TUCSON, ARIZONA

Title
BUSHING STYLE EMI FILTER

Drawn **S.M. 10-17-94**
Scale **X 5**
Approved **B.Mc. 10-17-94**

A **4402-018**