TF32 Series

Tuning Fork Crystal

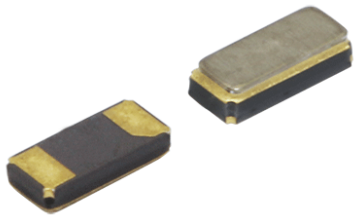

Part Dimensions:
3.2 × 1.5 × 0.9mm • 12.1467mg

Features

- 32.7680kHz Frequency Reference
- Tuning Fork Crystal Design
- Hermetic Ceramic Surface Mount Package
- Ideal for High Density Circuit Boards
- Frequency Tolerance, ±20ppm Standard
- Parabolic Temperature Coefficient
- Tape and Reel Packaging, EIA-418

Applications

- Real Time Clock Reference
- FPGAs & Microcontrollers
- Wearable Electronics
- IoT Applications
- Consumer Electronics
- Healthcare Devices
- Smart Meters
- Instrumentation

Description

CTS TF32 Series is ideal for supporting wide range of electronic designs requiring a Real Time Clock reference. This series will support general commercial and industrial applications.

Ordering Information

Model	Frequency Tolerance	Load Capacitance	Frequency Code [kHz]	Packaging
TF 32	2	P	32K7680	R

Code	Package
32	3.2x1.5mm

Code	Capacitance
P	12.5pF
J	9pF
V	7pF
T	6pF

Code	Packing
R	3k pcs./reel

Code	@ +25°C
2	±20ppm
1	±10ppm

Code	Frequency
	Product Frequency Code [1]

Notes:

1] Frequency is recorded with two leading digits before the 'K' and 4 significant digits after the 'K' [including zeros].

Not all performance combinations and frequencies may be available.
Contact your local CTS Representative or CTS Customer Service for availability.

This product is specified for use only in standard commercial applications. Supplier disclaims all express and implied warranties and liability in connection with any use of this product in any non-commercial applications or in any application that may expose the product to conditions that are outside of the tolerances provided in its specification.

©2017 CTS® Corporation. Information/product(s) subject to change. No warranty that product(s) will meet the stated specifications for customer specific applications or test equipment. Visit www.ctscorp.com for list of applicable patent(s), more information, or to request a quote.

Electrical Specifications

Operating Conditions

PARAMETER	SYMBOL	CONDITIONS	MIN	TYP	MAX	UNIT
Operating Temperature	T_A	-	-40	+25	+85	°C
Turnover Temperature	T_M	-	+20	+25	+30	°C
Storage Temperature	T_{STG}	-	-55	-	+125	°C

Frequency Stability

PARAMETER	SYMBOL	CONDITIONS	MIN	TYP	MAX	UNIT
Frequency	f_O	-		32.7680		kHz
Frequency Tolerance [Note 1]	$\Delta f/f_O$	Standard @ +25°C	-20	-	20	ppm
Parabolic Coefficient	ß	See Figure 1		-0.034 ±0.006		ppm/°C^2
Aging	$\Delta f/f_0$	First Year @ +25°C	-3	-	3	ppm

Crystal Parameters

PARAMETER	SYMBOL	CONDITIONS	MIN	TYP	MAX	UNIT
Operating Mode	-	-		Flexural Mode [Tuning Fork]		-
Load Capacitance [Note 1]	C_L	Standard	-	12.5	-	pF
Shunt Capacitance	C_0	-	-	1.0	-	pF
Motional Capacitance	C_1	-	-	3.4	-	fF
Series Resistance	R_1	-	-	-	70	kΩ
Drive Level	DL	-	-	0.5	1.0	µW
Insulation Resistance	R_i	+100Vdc ±15Vdc	500	-	-	MΩ

1.] See Ordering Information for available options.

Figure 1

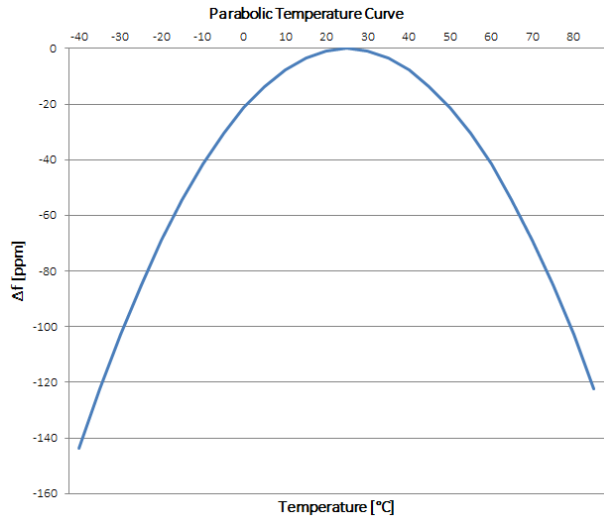

Frequency Stability [Δf] at a given temperature,

$$\Delta f = ß[T_A - T_M]^2$$

ß = Parabolic Coefficient
T_A = Ambient Temperature
T_M = Turnover Temperature

Ex. Find frequency stability at T_A = +45°C

$\Delta f = -0.034[45-25]^2$

$\Delta f = -0.034[20]^2$

$\Delta f = -13.6$ppm

©2017 CTS® Corporation. Information/product(s) subject to change. No warranty that product(s) will meet the stated specifications for customer specific applications or test equipment. Visit www.ctscorp.com for list of applicable patent(s), more information, or to request a quote.

Mechanical Specifications

Package Drawing

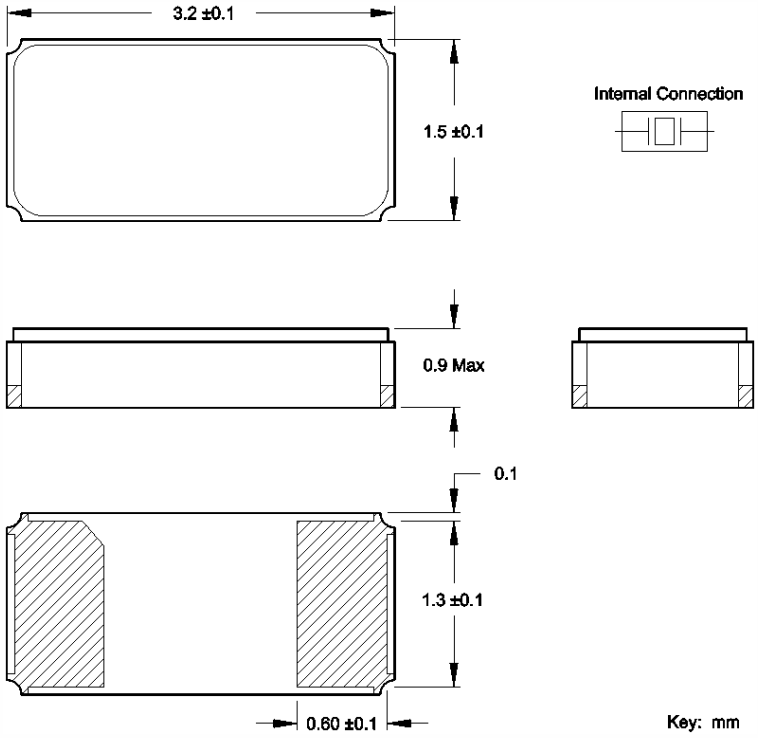

Marking Information

Contact factory for marking formats that apply to this model series.

Recommended Pad Layout

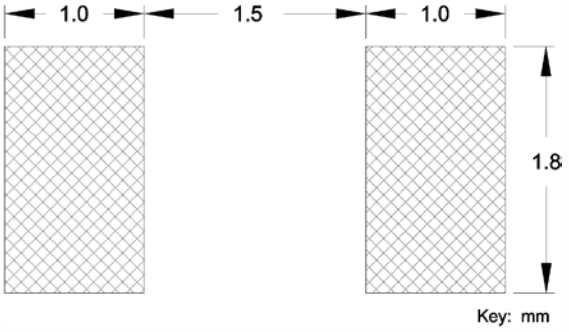

Notes

1. JEDEC termination code (e4). Barrier-plating is nickel [Ni] with gold [Au] flash plate.
2. Reflow conditions per JEDEC J-STD-020; +260°C maximum, 20 seconds.
3. MSL = 1.
4. Due to the large world-wide production volumes for this model series, product variability may exist between production date codes, such as package coloring and product marking format. CTS guarantees form-fit-function performance to published data sheet parameters. Contact your local CTS Representative or CTS Customer Service with specific questions.

©2017 CTS® Corporation. Information/product(s) subject to change. No warranty that product(s) will meet the stated specifications for customer specific applications or test equipment. Visit www.ctscorp.com for list of applicable patent(s), more information, or to request a quote.

Packaging - Tape and Reel

Tape Drawing

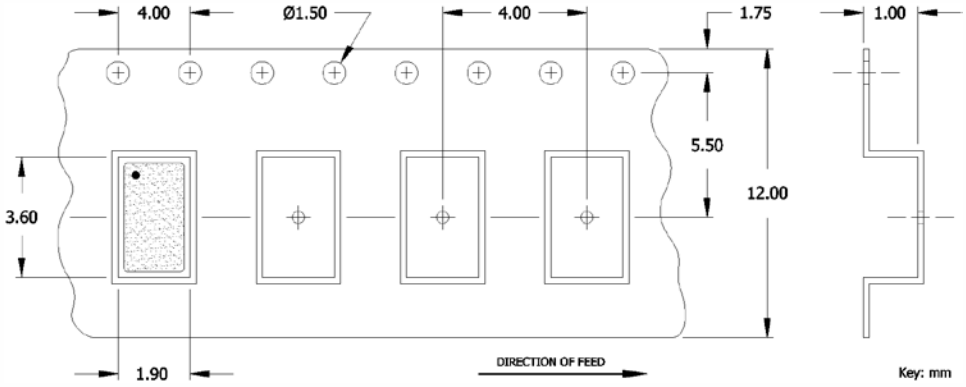

Reel Drawing

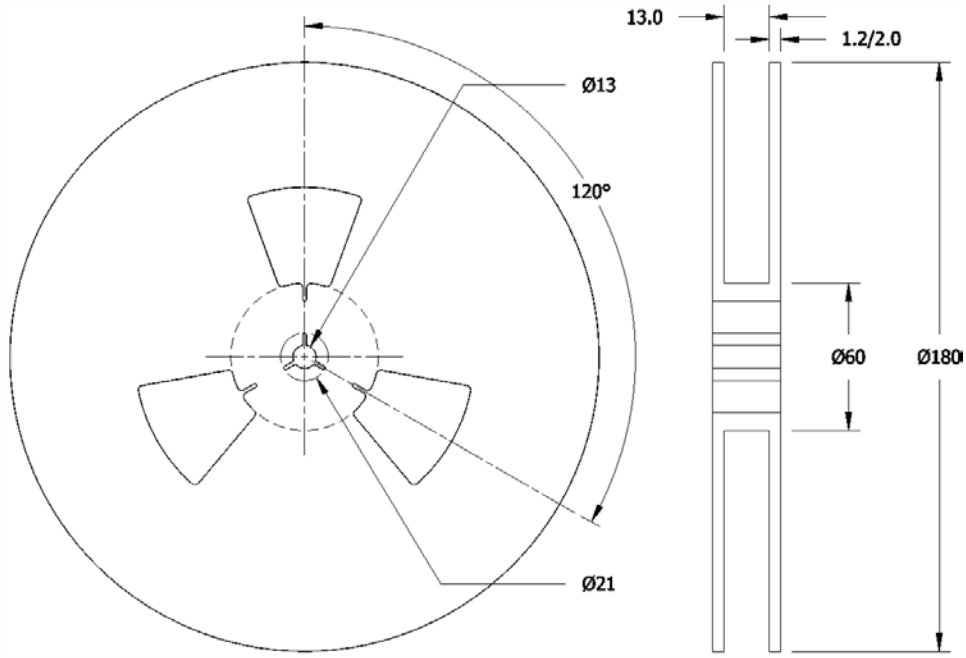

Notes

1. Device quantity is 3k pieces maximum per 180mm reel.
2. Complete CTS part number, frequency value, date code and manufacturing site code information must appear on reel and carton labels.

©2017 CTS® Corporation. Information/product(s) subject to change. No warranty that product(s) will meet the stated specifications for customer specific applications or test equipment. Visit www.ctscorp.com for list of applicable patent(s), more information, or to request a quote.