CUSTOMER

REV.	ECN NO.	DESCRIPTION	DATE	DESIGN

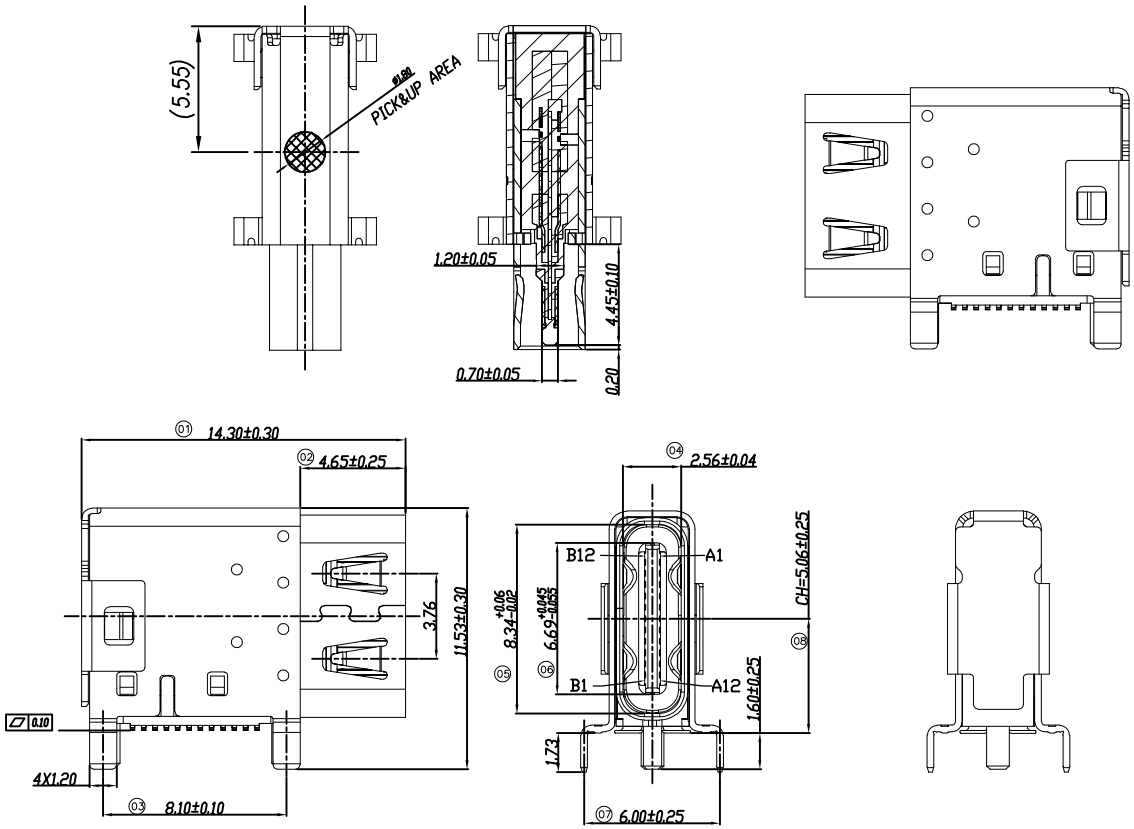

SPECIFICATION

1. CURRENT RATING : 5.0A FOR Vbus PIN,
   1.25A FOR Vconn PIN,
   0.25A FOR OTHER PINS.
2. CONTACT RESISTANCE : 40mΩ.
3. INSULATION RESISTANCE : 100MΩ MIN.
4. DIELECTRIC WITHSTANDING VOLTAGE : 100 VAC MIN.
5. OPERATING TEMPERATURE : −40°C TO +85°C.
6. MATING FORCE : 5~20N.
7. UNMATING FORCE : 8~20N.
8. DURABILITY : 10,000 CYCLES.
9. RECOMMENDED PROCESS :
   THE PEAK TEMPERATURE ON THE BOARD SHALL MAINTAIN 260°C.

PIN ASSIGNMENT

A1	A2	A3	A4	A5	A6	A7	A8	A9	A10	A11	A12
GND	TX1+	TX1−	Vbus	CC1	D+	D−	SBU1	Vbus	RX2−	RX2+	GND
GND	RX1+	RX1−	Vbus	SBU2	D−	D+	CC2	Vbus	TX2−	TX2+	GND
B12	B11	B10	B9	B8	B7	B6	B5	B4	B3	B2	B1

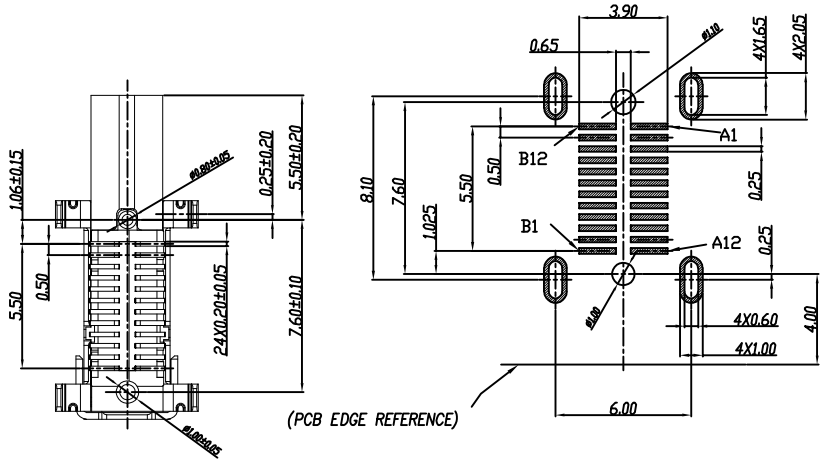

RECOMMENDED P.C.B LAYOUT
TOLERANCE ± 0.05mm (TOP VIEW)

5	TERMINAL	24	COPPER ALLOY	MATING SIDE:Au PLATING ; SOLDER TAIL:Gold FLASH, 50u" NICKEL OVERALL.	T=0.12
4	OUT SHELL	1	STAINLESS STEEL	NICKEL PLATING	T=0.30
3	MAIN SHELL	1	STAINLESS STEEL	NICKEL PLATING	T=0.30
2	MID PLATE	1	STAINLESS STEEL	NICKEL PLATING	T=0.15
1	MAIN HOUSING	1	HIGH TEMPERATURE		BLACK UL94V-0
ITEM	DESCRIPTION	Q'TY	MATERIAL	FINISH	REMARK

BILL OF MATERIAL

TOLERANCE		NAME(INTENDED USE) CUSTOMER DRAWING	FUYOU 广东富盈兴业精密科技实业有限公司 Guangdong FUYOU Precision Electronic Technology Co.,LTD.
X.X ±0.30	X.° ±10°	PART NO. FY23-019TC242F6143-01	TITLE: CF 24P母座侧贴14.3L
.XX ±0.20	.X° ± 8°		
.XXX ±0.10	.XX° ± 5°	DESIGN: ZXM	DRAWG NO. FY23-019TC242F6143-01
UNITS	mm		
MATERILA	----	CHED:	SCALE 1:1 / SHEET 1/2 / REV. A
FINISH	-----	APPD:	