PART NO.	A	B	C	D	E	F
△1 7196-0396-02	2.20	3.35	3.30	3.70	2.20	1.90
7116-2891-02	2.80	3.80	3.30	3.70	2.20	1.90
7116-2892-02	3.70	4.80	4.00	3.70	2.20	1.90
7116-2893-02	4.00	5.20	4.00	4.00	2.50	2.20

注記

1. 取扱説明書No. YPES-15-379

NOTE

1. HANDLING MANUAL NO. YPES-15-379

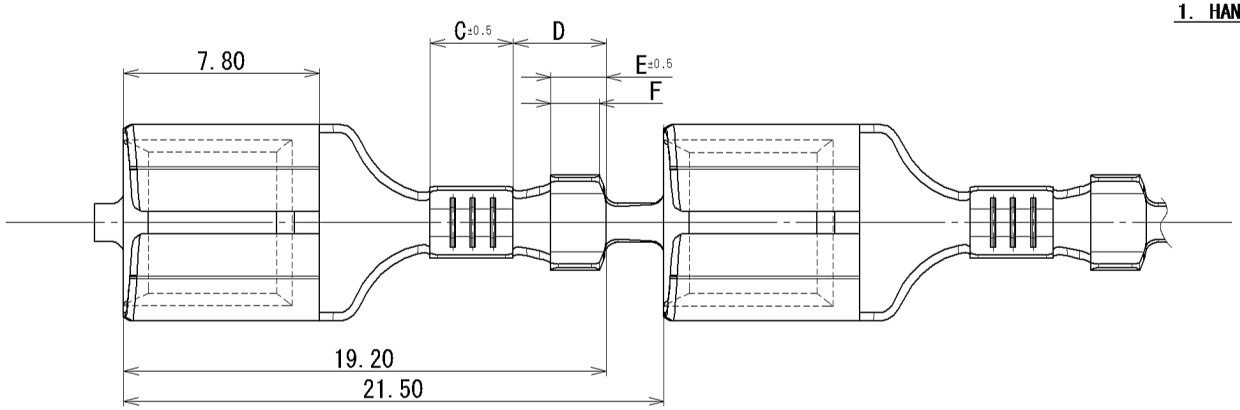

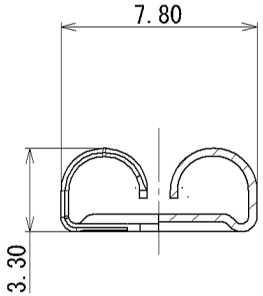

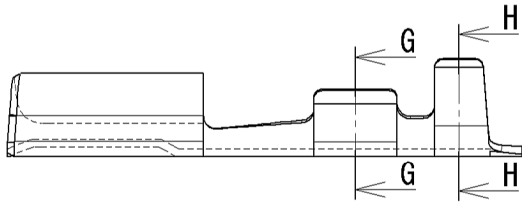

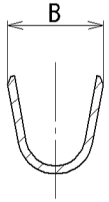

SEC. H-H

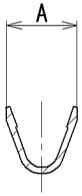

SEC. G-G

ISSUE MARK

△1	2015/05/20	ADDED PART NO., ETC.	C15-Z161	A.P
	1993/02/24	NEW	C93-6235	I.I
LET	DATE	REVISION RECORD	NO.	CHKD

GENERAL TOLERANCE

	10MAX	50MAX	100MAX	250MAX	2500VR	ANGLE	ECCENT
A	±0.15	±0.2	±0.3	±0.5	±0.75	±30'	0.1
B	±0.2	±0.3	±0.55	±0.95	±1.4	±30'	0.1
Ⓒ	±0.3	±0.5	±0.8	±1.4	±2	±30'	0.15

SPECIFIED

MASS

CUSTOMER

CUSTOMER PART NO. | CUSTOMER DWG NO.

OFFICE | TRIAL PART NO.

VENDOR

VENDOR NO.

DWG TYPE	DWG SOURCE	DWG DATE	UNIT	SCL	ANGLE
R	NEW	1993/02/24	mm	5:1	3

APPROVED	CHECKED	CHECKED	DESIGN	DRAWN
S. SUZUKI	M. NAGANO	T. SHIMIZU	AKEDA	A. PIMENTEL
2015/05/20	2015/05/20	2015/05/20	1993/02/24	2015/05/20

MATL. SPEC. △1 COPPER ALLOY (t=0.32)

TREAT. & FIN. △1 TIN PLATING

NAME △1 ISO RELAY 6.3 TERMINAL FEMALE

PART NO. / CH. CODE 7116-2891-02 ETC.

DWG NO. 7116-2891-02:R

SET DWG NO.

YAZAKI CORPORATION