Materials
Shell: brass, nickel plated

Environmental requirements
Waterproof: IP67 when mating with corresponding (IP67) socket connector

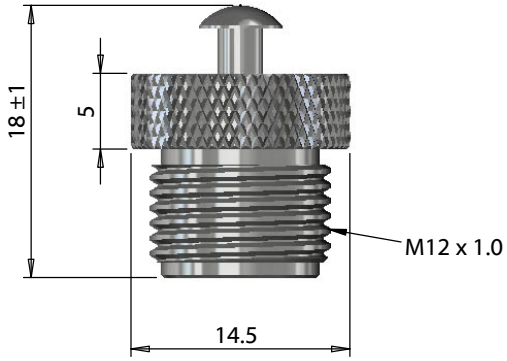

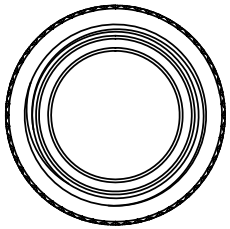

Revision:	Date:	Description:
A	2/2/2023	Initial release

Prepared: JD Digitally signed by JD Date: 2023.02.02 16:07:20 -08'00'

Verified: MP Digitally signed by MP Date: 2023.02.03 14:54:21 -08'00'

Dimensions are in millimeters.
Tolerances:
X: ± 0.5 mm
X.X: ± 0.3 mm
X.XX: ± 0.05 mm

Notes:

RoHS compliant

Function test: no open, no short circuit, no intermittent

Description:

Cap, M12 socket, Ø14.5xL18 mm, brass, nickel plated

TENSILITY
tel 1.541.323.3228 800 877.670.7118
fax 1.541.323.4202 web tensility.com

Size: A
Part number: 55-00187
Scale: 2:1
Sheet 1 of 1

To see a custom version of this cable assembly, call Tensility at 541-323-3228 or email engineering@tensility.com

5 4 3 2 1