PART NO. △2	△1 A	△1 B	△1 W_1	△1 W_2	△3 H_1	△3 H_2
△4 7126-8853-02(7B26-8853-02), B	3.00	5.40	3.90	2.40	(3.45)	(2.85)
△1 7126-8854-02, B	4.00	6.40	5.30	3.10	(4.70)	(3.60)
△1 7126-8855-02, B	4.00	6.40	6.40	4.10	(5.70)	(4.90)

△4 NOTES

1. HANDLING MANUAL NO. : YPES-15-535
2. PART NUMBERS IN PARENTHESIS SHALL BE USED FOR AIR BAG (A/B) CIRCUITS AND OTHER CIRCUITS DESIGNATED FOR SPECIAL MONITORING.

△4 注記

1. 取扱説明書No. : YPES-15-535
2. ( ) 内品番は、エアバッグ (A/B) 回路及び特別管理回路に使用する時に適用すること。

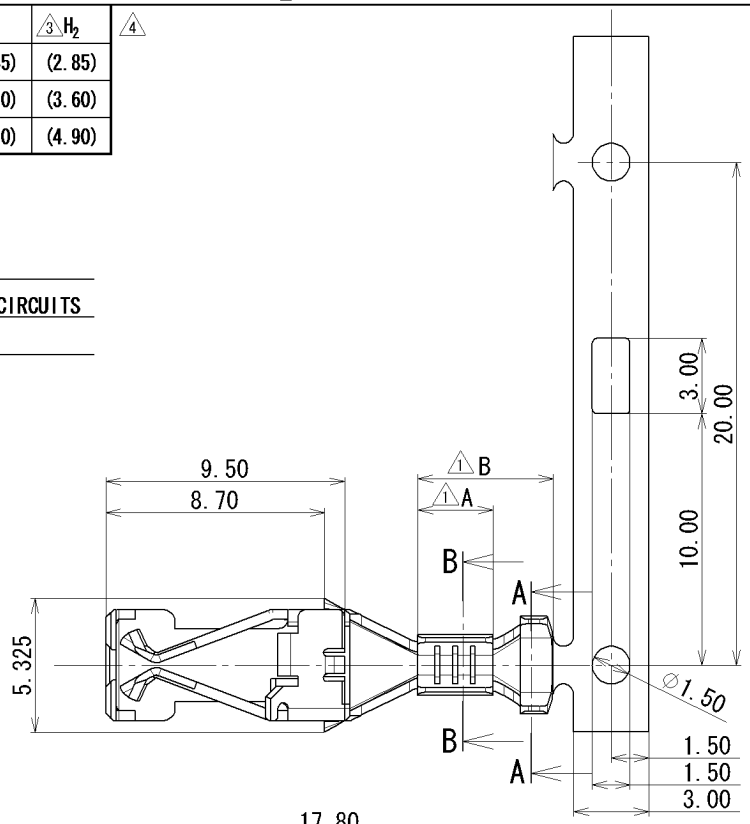

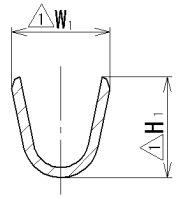

SEC. A-A

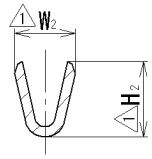

SEC. B-B

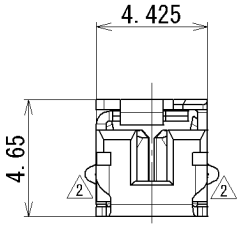

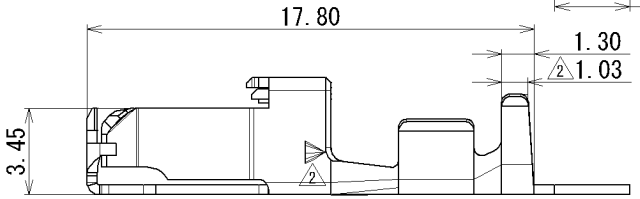

LET	DATE	REVISION RECORD	NO.	CHKD
△4	13/11/07	ADDED A/B PART NO., ETC.	C13-Z488	R.M
△3	07/10/29	CLERICAL ERROR CORRECTION	C07-XB32	T.H
△2	07/04/18	CHANGED FORM, ETC., B	C07-Z320	T.M
△1	04/03/08	ADDED PART NO., ETC.	C04-Z161	J.G
	03/04/07	NEW, A	C03-X270	Y.S

GENERAL TOLERANCE

	10MAX	50MAX	100MAX	250MAX	2500VR	ANGLE	ECCENT
A	±0.15	±0.2	±0.3	±0.5	±0.75	±30'	0.1
B	±0.2	±0.3	±0.55	±0.95	±1.4	±30'	0.1
C	±0.3	±0.5	±0.8	±1.4	±2	±30'	0.15

SPECIFIED

MASS g

CUSTOMER					
CUSTOMER PART NO.		CUSTOMER DWG NO.			
OFFICE		TRIAL PART NO.			
VENDOR					
VENDOR NO.					
DWG TYPE	DWG SOURCE	DWG DATE	UNIT	SCL	ANGLE
R	NEW	03/04/07	mm	5:1	3
APPROVED	CHECKED	CHECKED	DESIGN	DRAWN	
M. FUKUDA	N. SAKAMOTO		Y. SHIGETA	R. MORTELA	
13/11/07	13/11/07		01/03/26	13/11/07	

MATL. SPEC. COPPER ALLOY (t=0.4)

TREAT. & FIN. TIN PLATING

NAME LOW HEIGHT MINI FUSE TERMINAL

PART NO. CH. CODE △4 7126-8853-02 ETC. (7B26-8853-02)

DWG NO. 7126-8853-02:R

SET DWG NO.

YAZAKI CORPORATION

ISSUE MARK