REV.	DESCRIPTION	APPD	DATE

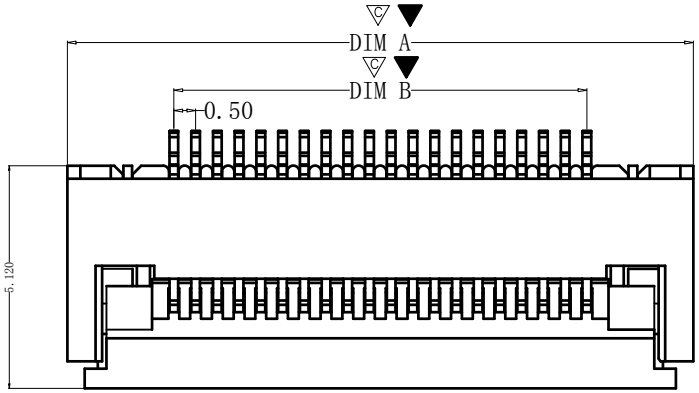

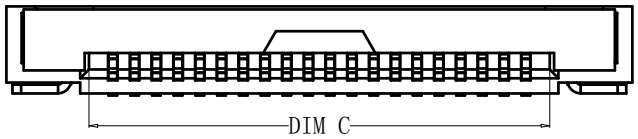

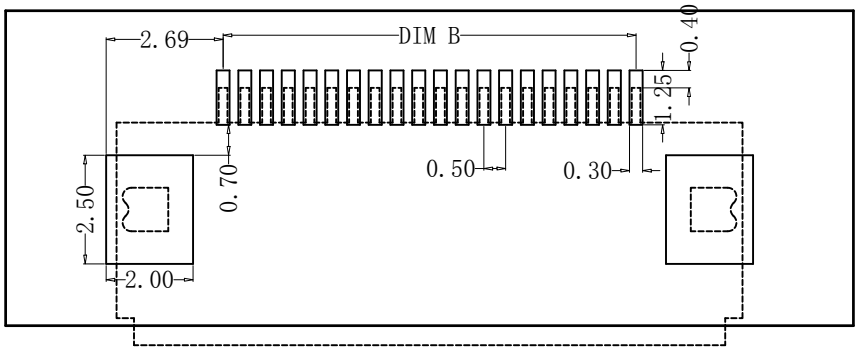

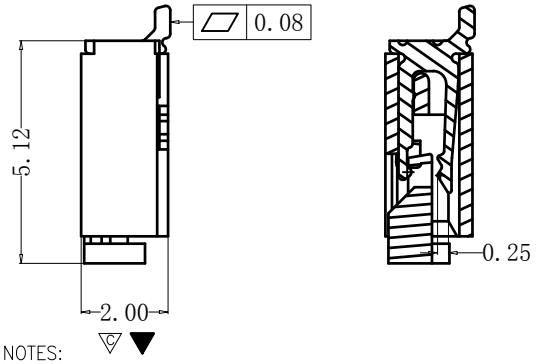

NOTES:

1.MATERIAL:

HOUSING: HIGH TEMPERATURE THERMOPLASTIC UL94V_0,COLOR:BLACK.

CONTACT: COPPER ALLOYS.

2.PLATING:

UNDERPLATE: NICKEL.

CONTACT AREA: TIN OVER NICKEL.

3.MULTIMEDIA CARD COMPATIBLE

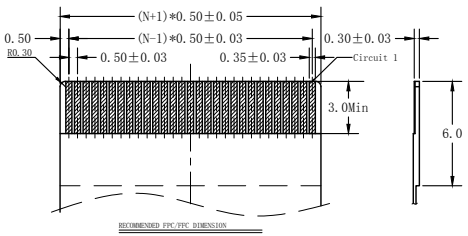

PIN NO.	DIM. A	DIM. B	DIM. C
04	6.40	1.50	2.57
05	6.90	2.00	3.07
06	7.40	2.50	3.57
07	7.90	3.00	4.07
08	8.40	3.50	4.57
09	8.90	4.00	5.07
10	9.40	4.50	5.57
11	9.90	5.00	6.07
12	10.40	5.50	6.57
13	10.90	6.00	7.07
14	11.40	6.50	7.57
15	11.90	7.00	8.07
16	12.40	7.50	8.57
17	12.90	8.00	9.07
18	13.40	8.50	9.57
19	13.90	9.00	10.07
20	14.40	9.50	10.57
21	14.90	10.00	11.07
22	15.40	10.50	11.57
23	15.90	11.00	12.07
24	16.40	11.50	12.57
25	16.90	12.00	13.07
26	17.40	12.50	13.57
27	17.90	13.00	14.07

PIN NO.	DIM. A	DIM. B	DIM. C
28	18.40	13.50	14.57
29	18.90	14.00	15.07
30	19.40	14.50	15.57
31	19.90	15.00	16.07
32	20.40	15.50	16.57
33	20.90	16.00	17.07
34	21.40	16.50	17.57
35	21.90	17.00	18.07
36	22.40	17.50	18.57
37	22.90	18.00	19.07
38	23.40	18.50	19.57
39	23.90	19.00	20.07
40	24.40	19.50	20.57
41	24.90	20.00	21.07
42	25.40	20.50	21.57
43	25.90	21.00	22.07
44	26.40	21.50	22.57
45	26.90	22.00	23.07
46	27.40	22.50	23.57
47	27.90	23.00	24.07
48	28.40	23.50	24.57
49	28.90	24.00	25.07
50	29.40	24.50	25.57
51	29.90	25.00	26.07
52	30.40	25.50	26.57
53	30.90	26.00	27.07
54	31.40	26.50	27.57
55	31.90	27.00	28.07
56	32.40	27.50	28.57
57	32.90	28.00	29.07
58	33.40	28.50	29.57
59	33.90	29.00	30.07
60	34.40	29.50	30.57

PART NO:		MATERIAL:	Bossie（博锡）
LOT NO:		FINSH:	
UNIT: MM	SIZE: A4	COLOR:	TITLE: 0.5mm P数:12 翻盖式 下接
TOLERANCES: X.X=±0.35 X.XX=±0.25 X.XXX=±0.15	GENERAL ANGLE: X.X=±3.0° X.XX=±2.0°	DR: Zhou qi	
		CHK:	DWG NO: BX-FPC05-2H12PX / REV: C/O
		APP:	SCALE: 1:1 / SHEET: 1 OF 1

E - 4 - 014