MARKETING SALES DRAWING

DIMENSIONS IN INCHES - DO NOT SCALE THIS DRAWING
DIMENSIONS IN METRIC [ ]

Electrical Testing per Tusonix standard test plans and Mil-Std-202 Test Methods.

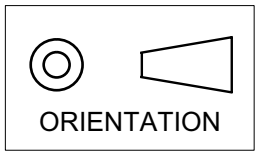

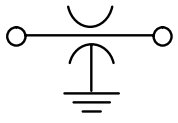

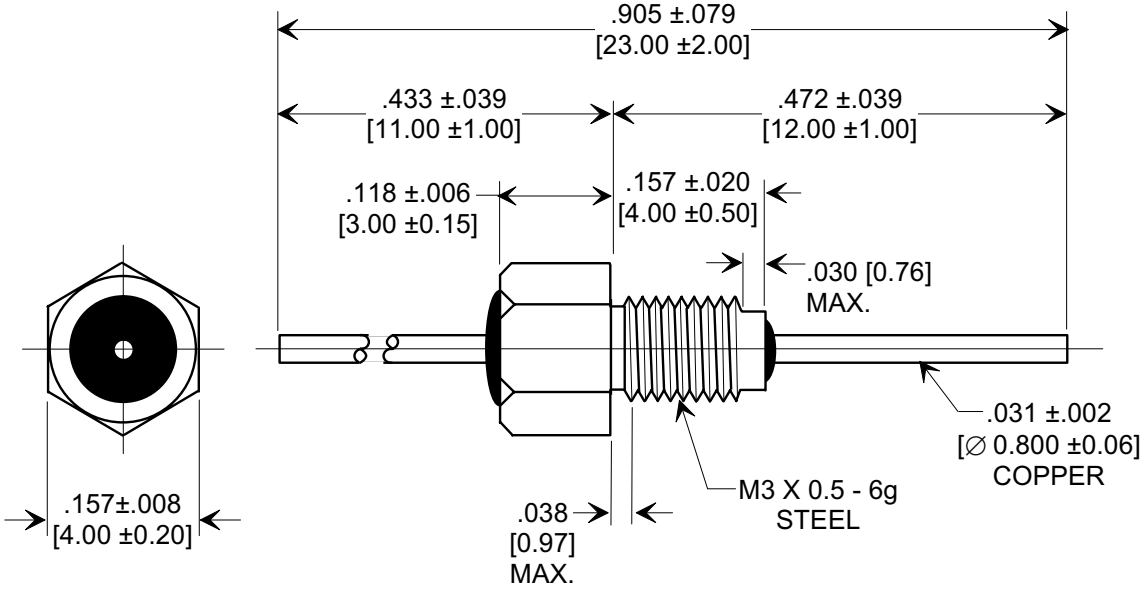

MOUNTING HARDWARE

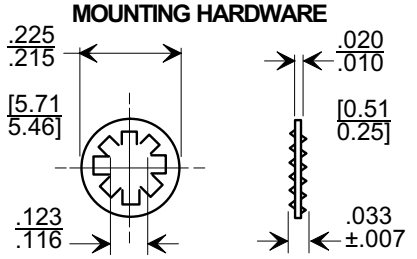

LOCK WASHER

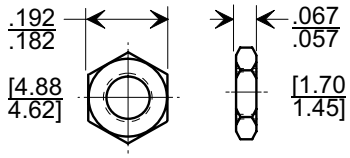

HEX NUT

NOTES:
1. TUSONIX STANDARD PART NUMBER: 4400-093.
   TUSONIX RoHS COMPLIANT PART NUMBER: 4400-093 LF.
   CUSTOMER MUST SPECIFY STANDARD OR RoHS PART NUMBER WHEN ORDERING.
2. MATERIAL: BUSHING; SILVER PLATED. LEAD; SILVER PLATED.
3. PART MARKING: TRADEMARK AND VARIATION NUMBER ON HEX FLATS. STANDARD PART: BLACK INK. RoHS PART: GREEN INK.
4. OPERATING TEMP. RANGE: -55°C TO +125°C.
5. MAX. RECOMMENDED SOLDERING TEMPERATURE : 260° C.
6. SUPPLIED WITH SILVER PLATED INTERNAL TOOTH LOCK WASHER.
7. MAX. RECOMMENDED MOUNTING TORQUE : 2.0 Lb. in. [.226 Nm.].

CAP.(pf)	TOLERANCE	DC WORKING VOLTAGE		DC CURRENT (AMPS)	I.R. MIN. @ 100 (VDC)	DWV (VDC)	MIN. NO LOAD INSERTION LOSS (db) @ 25°C PER MIL-STD-220				
		85°C	125 °C				1 MHz	10 MHz	100 MHz	1 GHz	10 GHz
10,000	GMV	70	50	10	10 G Ω	150	4	21	35	50	60

REVISION RECORD

0	Original Release C.O. **19991013-1-01**	
	ADDED HEX NUT (2) PLCS. S.M. 01-07-00	
1	**20000104-1-01**	ORIENTATION SYMBOL ADDED GMV WAS +80%/-20% DWV(VDC) 500 DELETED L.E. 04-13-00
2	**20000410-2-02**	ADDED IR & DWV. ADDED & REVISED NOTES. S.M.12-01-05
3	**20051128-1-13**	

--TOLERANCES--
Unless Otherwise Specified
DECIMAL ± NOTED
ANGLES ±

TUSONIX
TUCSON, ARIZONA

Title
BUSHING STYLE EMI FILTER

Drawn S.M. 10-14-99
Scale 5 X
Approved E.F. 10-14-99

A **4400-093**

X-2015 Rev-0