MARKETING SALES DRAWING

DIMENSIONS IN INCHES - DO NOT SCALE THIS DRAWING
DIMENSIONS IN METRIC - [ ]

Electrical Testing per Tusonix standard test plans and Mil-Std-202 Test Methods.

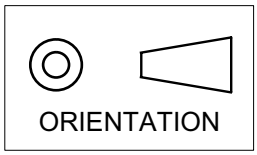

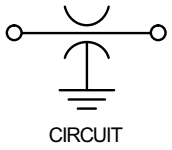

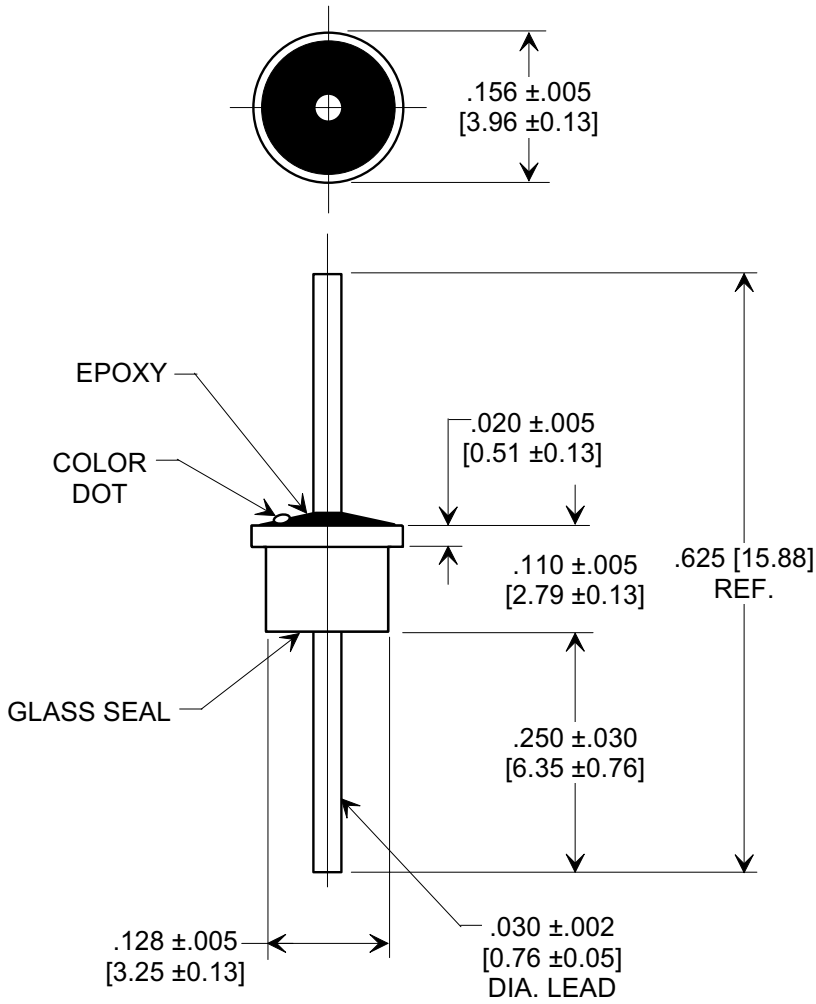

NOTES:
1. Operating temperature range: -55°C to +125°C.
2. Gold plated case and lead.
3. Epoxy sealed on opposite end from glass seal.
4. Max. recommended soldering temperature: 260°C.
   See installation recommendations.
5. Recommended mounting hole: .135 dia.
6. Solder preform available for mounting.
7. Tusonix Standard part number: 4300-006.
   Tusonix RoHS compliant part number: 4300-006 LF.
   Customer must specify Standard or RoHS part number when ordering.
8. RoHS compliant part marked with additional dark green dot for identification.

Cx (pF)	TOL.	DC WORKING VOLTAGE		I.R. MIN. @ 100 (VDC.)	DWV (VDC)	DC CURRENT (AMPS)	MIN. NO LOAD INSERTION LOSS (dB) @ 25° C PER MIL-STD-220					COLOR CODE
		85°C	125°C				1 MHz	10 MHz	100 MHz	1 GHz	10 GHz	
15,000	GMV	70	50	10 G	150	5	7	20	35	55	60	ORANGE

REVISION RECORD

0	Original Release C.O.
10	REDRAWN & REVISED ADDED 008, 009 & 010. E.C. 05-30-90
5261	VARS 005, 006, 007 & 1MHz COLUMN ADDED. L.E. 11-07-90
11	5591
5591	VARS 080 WAS 010 & VAR 013 ADDED. L.E. 06-10-91
12	5966
5966	RDN TO COMP FMP. STYLE DWG SPLIT FOR EACH VAR. S.M. 10-02-02
13	20021001-7-05
20021001-7-05	ADDED NOTES 7 & 8. S.M. 05-23-05
14	20050511-2-12

--TOLERANCES--
Unless Otherwise Specified

DECIMAL ± NOTED

ANGLES ±

TUSONIX
TUCSON, ARIZONA

Title
SOLDER MOUNT EMI FILTER

Drawn S.M. 10-02-02

Scale 5 X

Approved T.C. 10-02-02

A **4300-006**

X-2015 Rev-0