This drawing is the property of Tusonix, Inc., and may not be used, reproduced, published or disclosed to others without expressed authorization by Tusonix Inc.

MARKETING SALES DRAWING

DIMENSIONS IN INCHES - DO NOT SCALE THIS DRAWING
DIMENSIONS IN METRIC - [ ]

ORIENTATION

CIRCUIT

Electrical Testing per Tusonix standard test plans and Mil-Std-202 Test Methods.

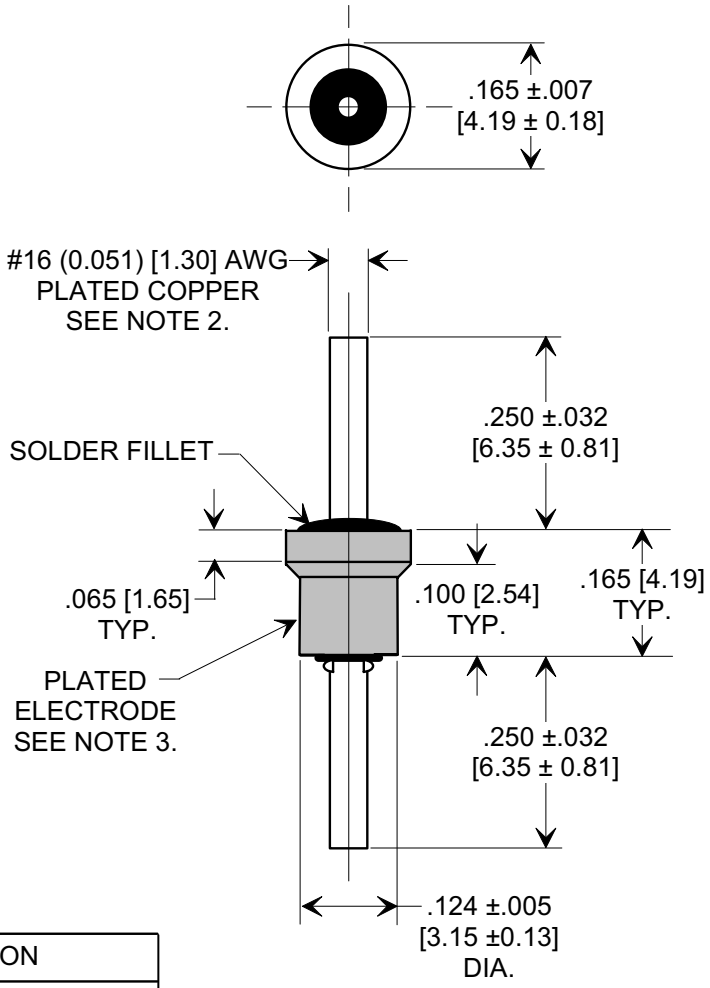

OPERATING INFORMATION	
STYLE NO.	2461-001
VALUE	1000 pF
VALUE TOL.	+100% / -0%
TEMP. COEF.	X7V
RATING	100VDC@+125°C
OPERATING RANGE	-55°C,+125°C
DWV	600
I.R. MIN @ 100VDC	10 GΩ
TO TUSONIX SPEC. UNLESS STATED OTHERWISE.	

NOTES:
1. TUSONIX STANDARD PART NUMBER: 2461-001-X7V0-102P.
   TUSONIX RoHS COMPLIANT PART NUMBER:
   2461-001-X7V0-102P LF.
   CUSTOMER MUST SPECIFY STANDARD OR RoHS PART NUMBER WHEN ORDERING.
2. LEAD FINISH: STANDARD PART #: 60/40 SOLDER PLATED. RoHS PART #: SILVER PLATED.
3. ELECTRODE FINISH: STANDARD PART #: 60/40 SOLDER PLATED. RoHS PART #: MATTE TIN PLATED.
4. PART MARKING: STANDARD PART: NO MARKING. RoHS PART: MARKING ON PACKAGING ONLY.

REVISION RECORD
A — Original Release C.O. ECO-659

X-2015 Rev-0

--TOLERANCES--
Unless Otherwise Specified
DECIMAL ± .015 [.38]
ANGLES ±

Title: **SHOULDER FEED-THRU**

Drawn L.E. 04-14-09 | Scale 4 X
Approved R.L. 04-14-09

TUSONIX
TUCSON, ARIZONA

A | 2461-001-X7V0-102P