SAMZO | REAC/ROHS

REV	ECN NO	DESRIPTION	DESIGN	APPROVAL	DATE
A1	NEW	Replace frame			2018.06.14

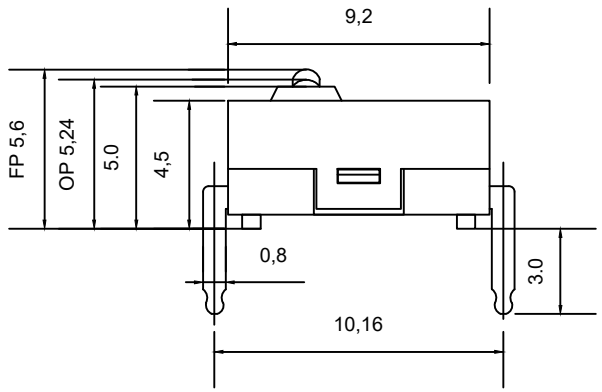

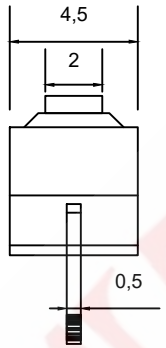

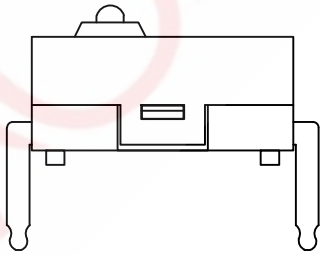

SCHEMATIC

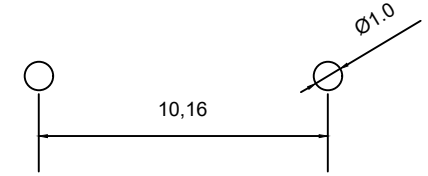

PCB LAYOUT

A.系列:4A:9.2系列微型
B.贴装方式:A-2P DIP
C.操作方式:A:点触
D.性能特性:A:0.5A 125V DC AC
E:触点镀层:T-铜点
F:操作力度:F-70gf
G:使用寿命:A:100,000万次

4A A A A T F A
Ⓐ Ⓑ Ⓒ Ⓓ Ⓔ Ⓕ Ⓖ

Rating	DC125V 0.5A	Electrical Life	100,000 cycles
Contact Resistance	500mΩ Max	Mechanical Life	100,000 cycles
Insulation Resistance	>50MΩ DC500V	Ambient Temper. Used	-25℃ to +85℃
Withstand Voltage	AC500V 1min.	Ambient Humidity Used	≤85% at +40℃
Soldering Temper.	235±5℃ 5s	Operating Force	60-90gf max

ITEM	DESCRIPTION	MATERIAL	QTY	FINSH/COLOR					
F	触点	铜合金	1	XXX					
E	端子	C2680	2	镀镍				GENERAL TOLERANCE	
D	弹片	C17200	1	进口高铍				⩾0~2<	±0.15
C	按钮	PBT	1	白色	DESIGN	WANGGUIFA	2018.06.12	⩾2~5<	±0.25
B	上盖	PBT	1	黑色	CHECKED	ZHENGUILAN	2018.06.12	⩾0~2<	±0.15
A	底座	PBT	1	白色	APPROVED	LILIANJIANG	2018.06.14	⩾5	±0.35

FIRST VIEW

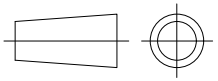

SCALE 1:1 UNIT mm

The copyright belongs to samzo parts [China] Co., Ltd. please use the material after samzo parts agree to authorize. The final right of interpretation belongs to samzo parts.
WWW.KKK-JP.COM

SAMZO COMPONENTS
Electronic switch and connector manufacturer

TITLE:: 9.2*4.5*5.6微型微动开关
DWG NO: 4AAA92-K01
PART NO: 4AAA231106
MODEL NO: 4AAAATFA
NAME: MICRO SWITCH